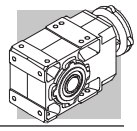

34 – РАЗМЕРЫ

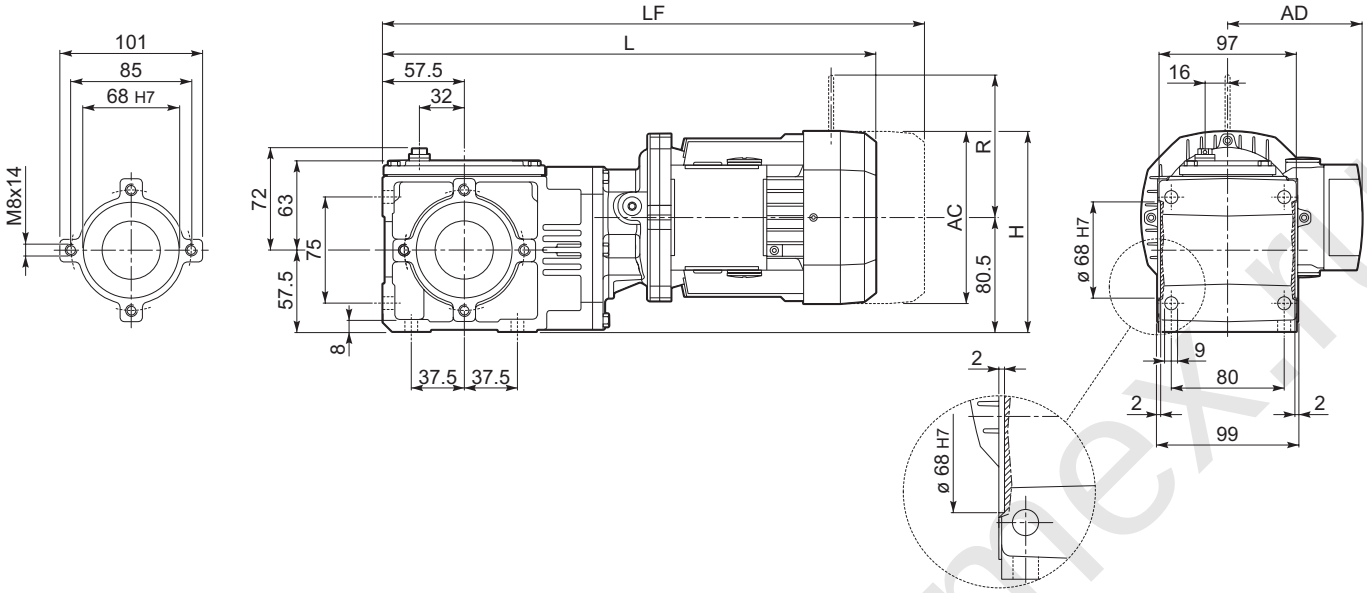

								M_FD M_FA		M_FD		M_FA	
			AC	H	L	AD	Kg	LF	Kg	R	AD	R	AD
A 05 2	**S05**	**M05**	121	141	360.5	95	7.5	426.5	9	96	119	116	95
A 05 2	**S1**	**M1S**	138	149.5	365.5	108	10.5	428.5	13	103	132	124	108
A 05 2	**S1**	**M1L**	138	149.5	389.5	108	11.5	450.5	14	103	132	124	108
A 05 2	**S2**	**M2S**	156	158.5	418.5	119	15.5	488.5	19	129	143	134	119

A 05...P(IEC)

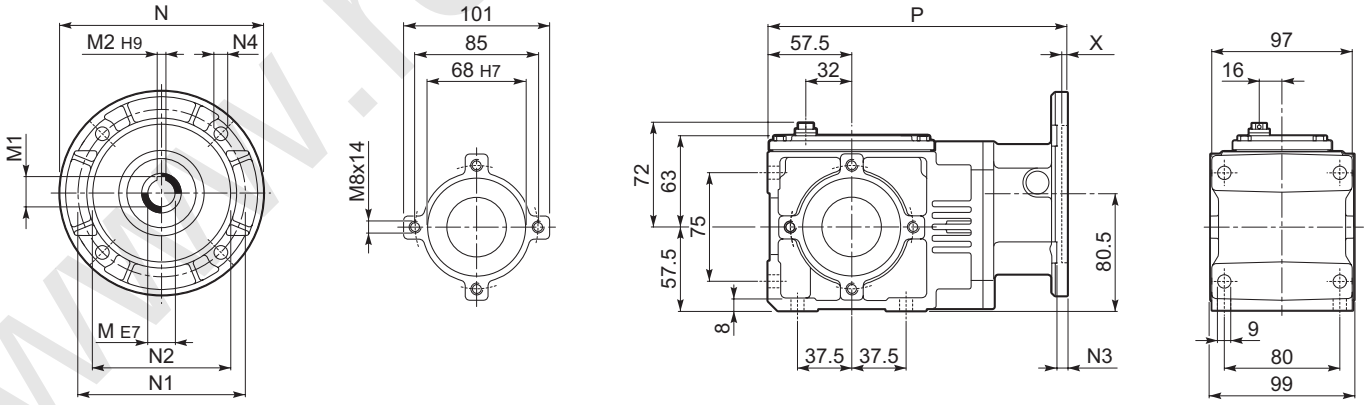

INPUT

		M	M1	M2	N	N1	N2	N3	N4	X	P	Kg
A 05 2	**P63**	11	12.8	4	140	115	95	7	9.5	3.5	206	5
A 05 2	**P71**	14	16.3	5	160	130	110	7	9.5	4	213	5
A 05 2	**P80**	19	20.8	6	200	165	130	7	11.5	4	223	5.5

www.redukt-mex.ru

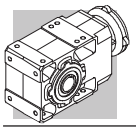

A 05...SK / SC

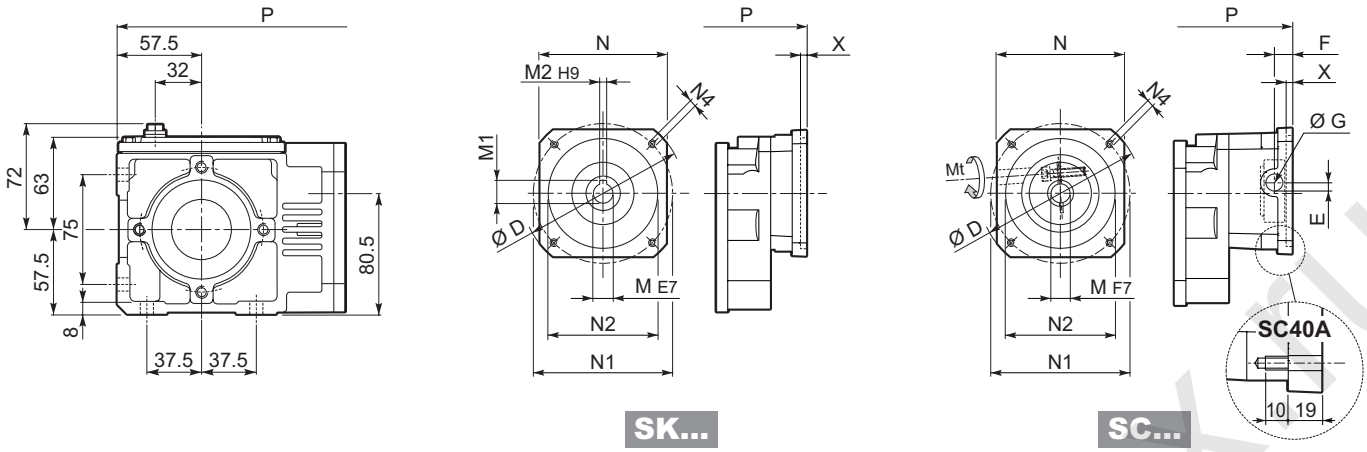

		D	M	M1	M2	N	N1	N2	N4	X	P	Kg
A 05 2	**SK40A**	74	9	10.4	3	55	63	40	M5x10	3	207.5	5
A 05 2	**SK60A**	102	11	12.8	4	82	75	60	M5x10	3.5	206	5
A 05 2	**SK60B**	102	14	16.3	5	82	75	60	M5x10	4	213	5
A 05 2	**SK80A**	115	14	16.3	5	90	100	80	M6x12	4	213	5

			Mt	D	E	F	G	M	N	N1	N2	N4	X	P	Kg
A 05 2	**SC40A**	M5	15 Nm	74	10.5	9.5	12.5	9	55	63	40	M5x10	3	226.5	6
A 05 2	**SC60A**	M6	15 Nm	102	7	12.5	12.5	11	82	75	60	M5x10	4	233	6
A 05 2	**SC60B**	M6	15 Nm	102	7	12.5	12.5	14	82	75	60	M5x10	4	233	6
A 05 2	**SC80A**	M6	15 Nm	115	6	12.5	12.5	14	90	100	80	M6x12	4	233	6

A 05...F...

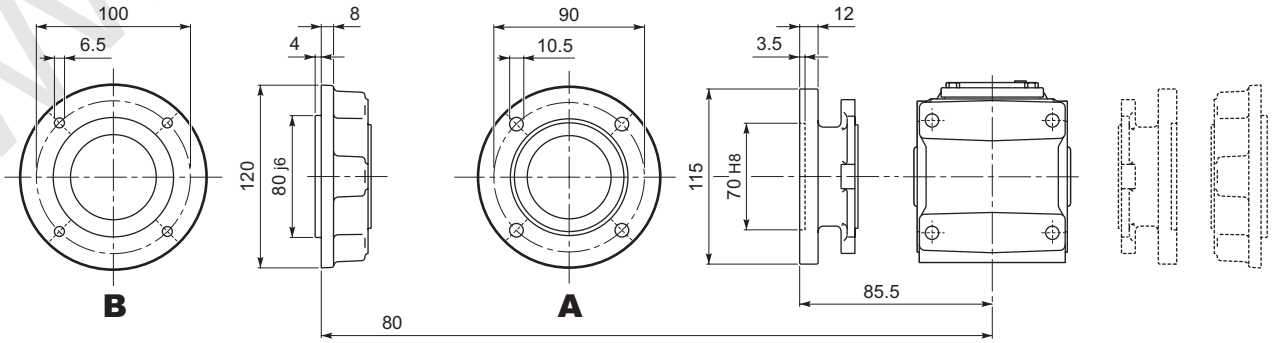

www.reduktor-mex.ru

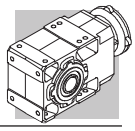

A 05...UH

H25

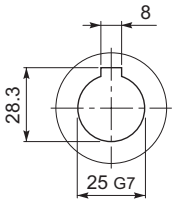

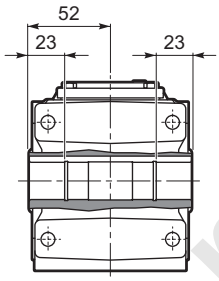

A 05...US

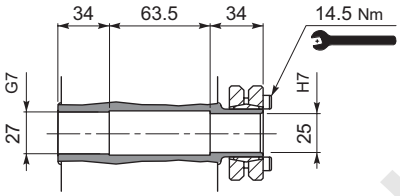

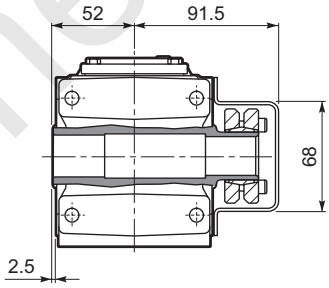

www.reduktor-mex.ru

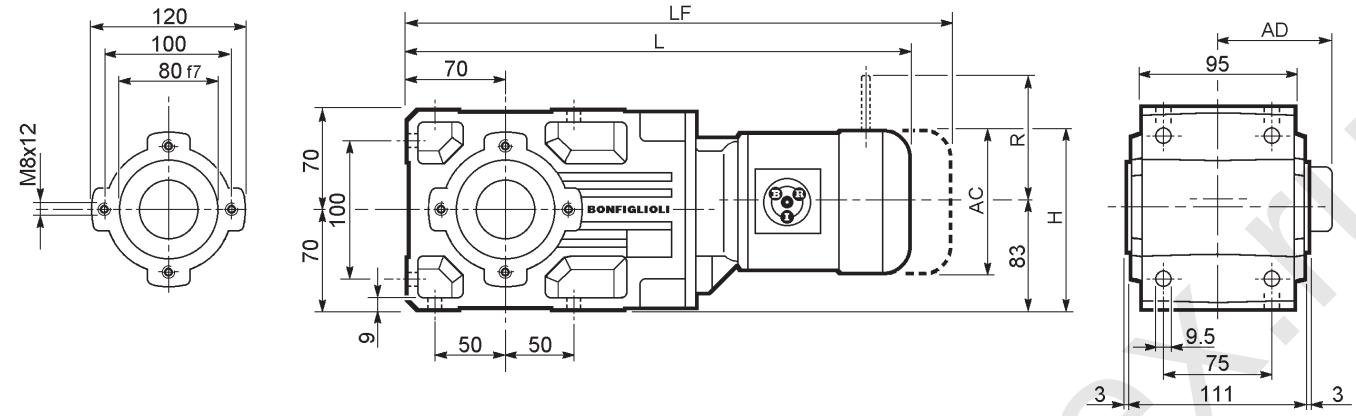

								M_FD M_FA		M_FD		M_FA	
			AC	H	L	AD	Kg	LF	Kg	R	AD	R	AD
A 10 2	**S05**	**M05**	121	143.5	408.5	95	12	474.5	14	96	119	116	95
A 10 2	**S1**	**M1S**	138	152	413.5	108	13	476.5	16	103	132	124	108
A 10 2	**S1**	**M1L**	138	152	437.5	108	14	498.5	17	103	132	124	108
A 10 2	**S2**	**M2S**	156	161	466.5	119	18	536.5	22	129	143	134	119
A 10 2	**S3**	**M3S**	195	180.5	509.5	142	23	605.5	30	160	155	160	142
A 10 2	**S3**	**M3L**	195	180.5	541.5	142	30	632.5	37	160	155	160	142

www.reduktor-mex.ru

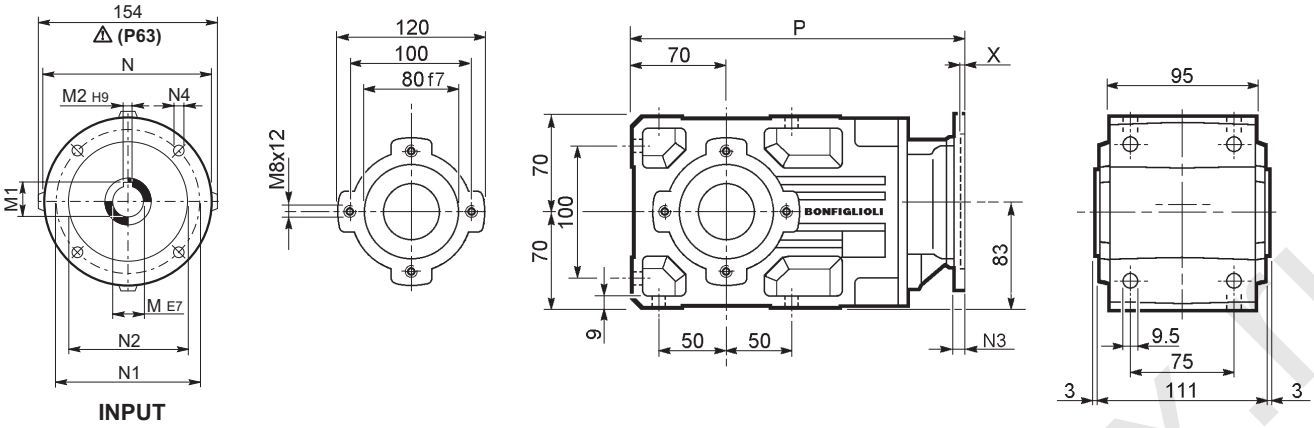

		M	M1	M2	N	N1	N2	N3	N4	X	P	Kg
A 10 2	**P63**	11	12.8	4	140	115	95	—	M8x10	4	282.5	8
A 10 2	**P71**	14	16.3	5	160	130	110	—	M8x10	4.5	282.5	9
A 10 2	**P80**	19	21.8	6	200	165	130	—	M10x12	4	302	9
A 10 2	**P90**	24	27.3	8	200	165	130	—	M10x12	4	302	9
A 10 2	**P100**	28	31.3	8	250	215	180	—	M12x16	4.5	312	13
A 10 2	**P112**	28	31.3	8	250	215	180	—	M12x16	4.5	312	13

www.reduktor-inex.ru

A 10...HS

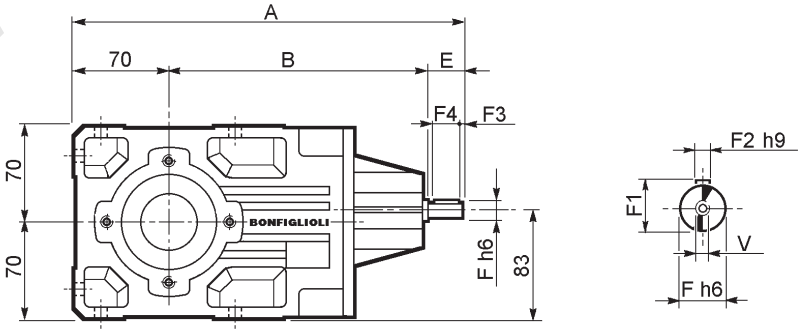

		A	B	E	F	F1	F2	F3	F4	V	Kg
A 10 2	**HS**	289.5	179.5	40	16	18	5	2.5	35	M6x16	7.8

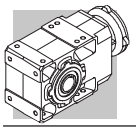

A 10...SK / SC

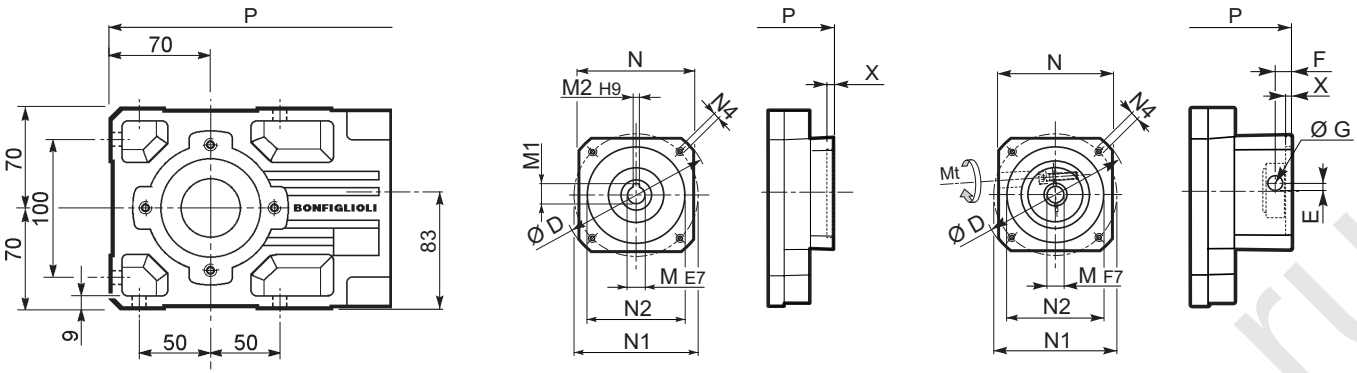

SK...

SC...

		D	M	M1	M2	N	N1	N2	N4	X	P	Kg
A 10 2	**SK60A**	102	11	12.8	4	82	75	60	M5x10	3.5	254	8
A 10 2	**SK60B**	102	14	16.3	5	82	75	60	M5x10	4	261	8
A 10 2	**SK80A**	115	14	16.3	5	90	100	80	M6x12	4	261	8
A 10 2	**SK80C**	120	19	21.8	6	96	100	80	M6x12	4	302	9
A 10 2	**SK95A**	130	14	16.3	5	102	115	95	M8x12	4	302	9
A 10 2	**SK95B**	130	19	21.8	6	102	115	95	M8x12	4	302	9
A 10 2	**SK95C**	130	24	27.3	8	102	115	95	M8x12	4	302	9
A 10 2	**SK110A**	150	19	21.8	6	120	130	110	M8x12	5	302	9
A 10 2	**SK110B**	150	24	27.3	8	120	130	110	M8x12	5	302	9

			Mt	D	E	F	G	M	N	N1	N2	N4	X	P	Kg
A 10 2	**SC60A**	M6	15 Nm	102	7	12.5	12.5	11	82	75	60	M5x10	4	281	9
A 10 2	**SC60B**	M6	15 Nm	102	7	12.5	12.5	14	82	75	60	M5x10	4	281	9
A 10 2	**SC80A**	M6	15 Nm	115	6	12.5	12.5	14	90	100	80	M6x12	4	281	9
A 10 2	**SC80C**	M6	15 Nm	120	15.5	14.5	17.75	19	96	100	80	M6x12	4	325.5	10
A 10 2	**SC95A**	M6	15 Nm	130	16.5	15	17.75	14	102	115	95	M8x16	4	325.5	10
A 10 2	**SC95B**	M6	15 Nm	130	16.5	15	17.75	19	102	115	95	M8x16	4	325.5	10
A 10 2	**SC95C**	M6	15 Nm	130	16.5	15	17.75	24	102	115	95	M8x16	4	325.5	10
A 10 2	**SC110A**	M6	15 Nm	150	16.5	16	17.75	19	120	130	110	M8x16	5	325.5	12
A 10 2	**SC110B**	M6	15 Nm	150	16.5	16	17.75	24	120	130	110	M8x16	5	325.5	12

A 10...F...

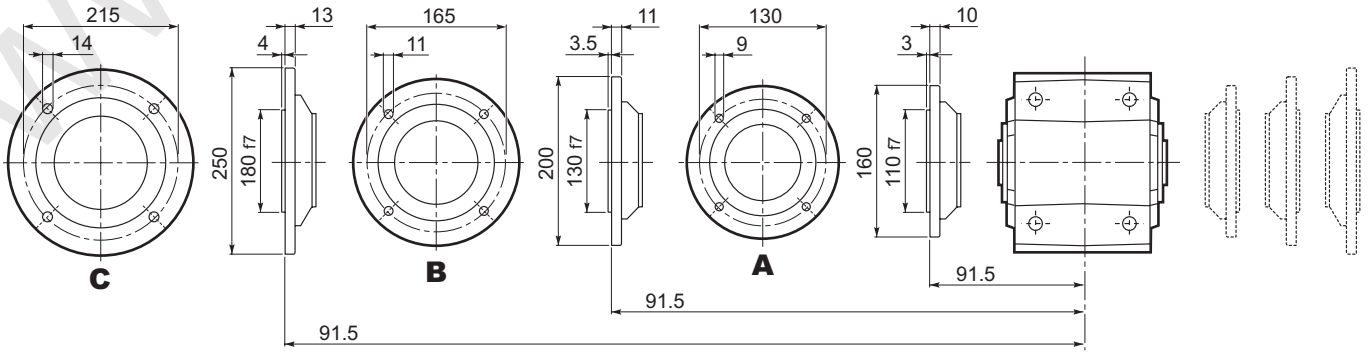

www.redukTor.nrex.ru

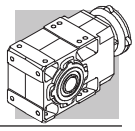

A 10...UR

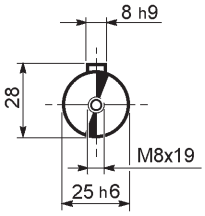

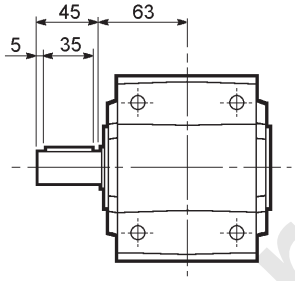

A 10...UD

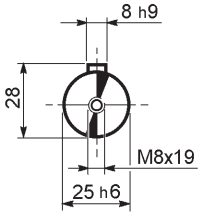

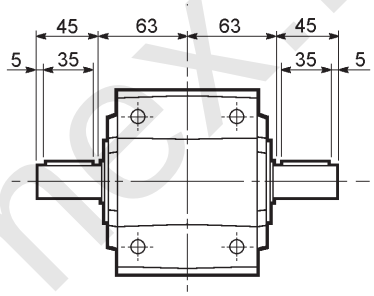

A 10...UH

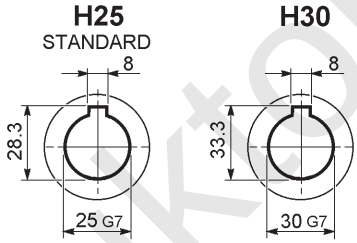

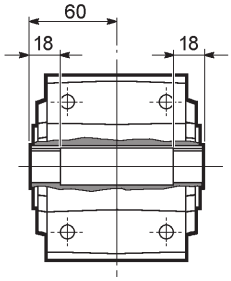

A 10...US

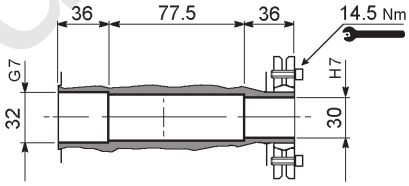

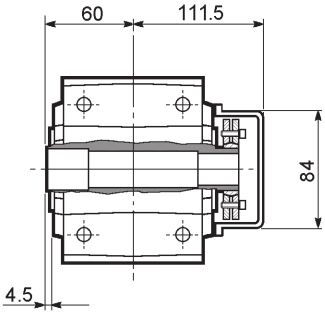

A 10...QF

	Ø
QF25	25
QF30	30

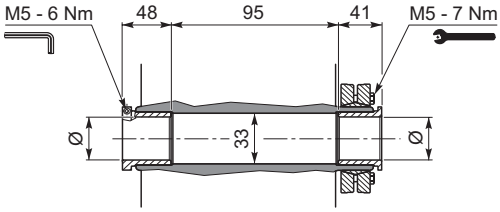

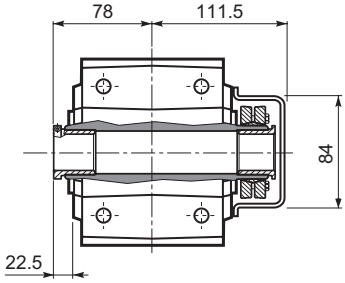

www.redukt-or-mex.ru

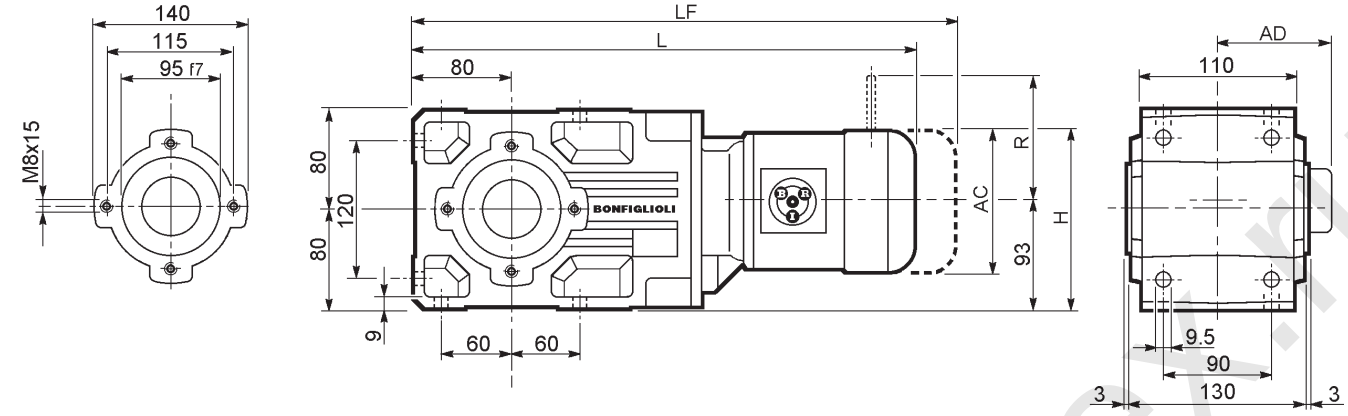

								M_FD M_FA		M_FD		M_FA	
			AC	H	L	AD	Kg	LF	Kg	R	AD	R	AD
A 20 2	**S05**	**M05**	121	143.5	432	95	16	498	18	96	119	116	95
A 20 2	**S1**	**M1S**	138	152	437	108	17	500	19	103	132	124	108
A 20 2	**S1**	**M1L**	138	152	461	108	18	522	21	103	132	124	108
A 20 2	**S2**	**M2S**	156	161	490	119	22	560	26	129	143	134	119
A 20 2	**S3**	**M3S**	195	180.5	533	142	27	629	34	160	155	160	142
A 20 2	**S3**	**M3L**	195	180.5	565	142	34	656	41	160	155	160	142
A 20 3	**S05**	**M05**	121	143.5	457.5	95	16	553.5	18	96	119	116	95
A 20 3	**S1**	**M1S**	138	152	462.5	108	17	555.5	20	103	132	124	108
A 20 3	**S1**	**M1L**	138	152	486.5	108	19	577.5	21	103	132	124	108
A 20 3	**S2**	**M2S**	156	161	545.5	119	23	615.5	27	129	143	134	119
A 20 3	**S3**	**M3S**	195	180.5	588.5	142	28	684.5	35	160	155	160	142
A 20 3	**S3**	**M3L**	195	180.5	620.5	142	35	711.5	42	160	155	160	142

www.reduktor-mex.ru

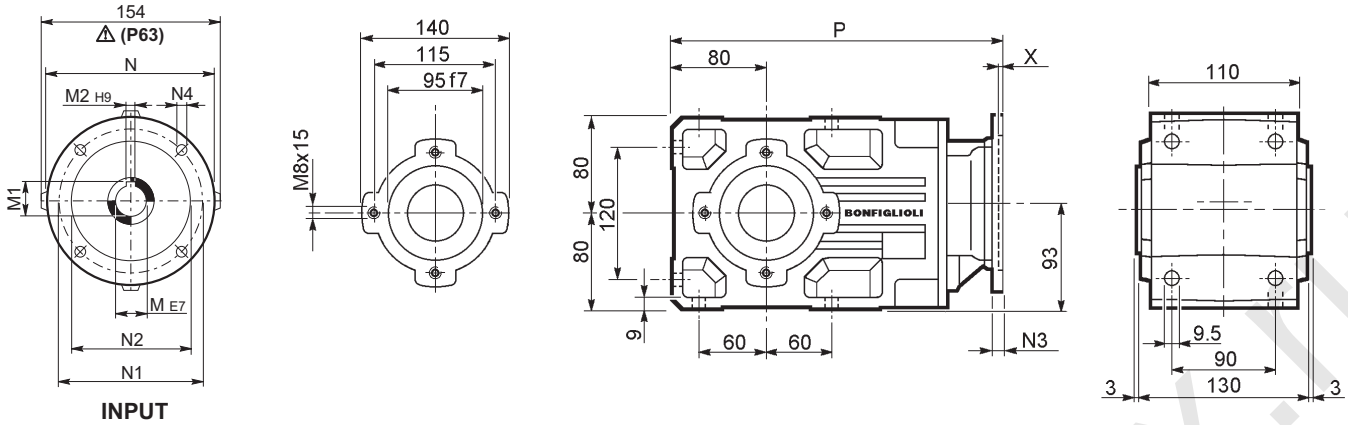

		M	M1	M2	N	N1	N2	N3	N4	X	P	Kg
A 20 2	**P63**	11	12.8	4	140	115	95	—	M8x19	4	306	12
A 20 2	**P71**	14	16.3	5	160	130	110	—	M8x16	4.5	306	12
A 20 2	**P80**	19	21.8	6	200	165	130	—	M10x12	4	325.5	13
A 20 2	**P90**	24	27.3	8	200	165	130	—	M10x12	4	325.5	13
A 20 2	**P100**	28	31.3	8	250	215	180	—	M12x16	4.5	335.5	17
A 20 2	**P112**	28	31.3	8	250	215	180	—	M12x16	4.5	335.5	17
A 20 3	**P63**	11	12.8	4	140	115	95	—	M8x19	4	361.5	13
A 20 3	**P71**	14	16.3	5	160	130	110	—	M8x16	4.5	361.5	13
A 20 3	**P80**	19	21.8	6	200	165	130	—	M10x12	4	381	14
A 20 3	**P90**	24	27.3	8	200	165	130	—	M10x12	4	381	14
A 20 3	**P100**	28	31.3	8	250	215	180	—	M12x16	4.5	391	18
A 20 3	**P112**	28	31.3	8	250	215	180	—	M12x16	4.5	391	18

www.redukTor-mex.ru

A 20...HS

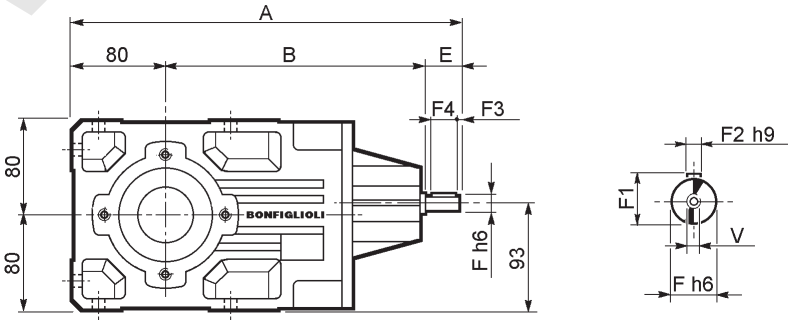

		A	B	E	F	F1	F2	F3	F4	V	Kg
A 20 2	**HS**	356	236	40	19	21.5	6	2.5	35	M6x16	11.9
A 20 3		368.5	248.5	40	16	18	5	2.5	35	M6x16	12.2

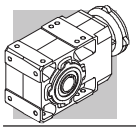

A 20...SK / SC

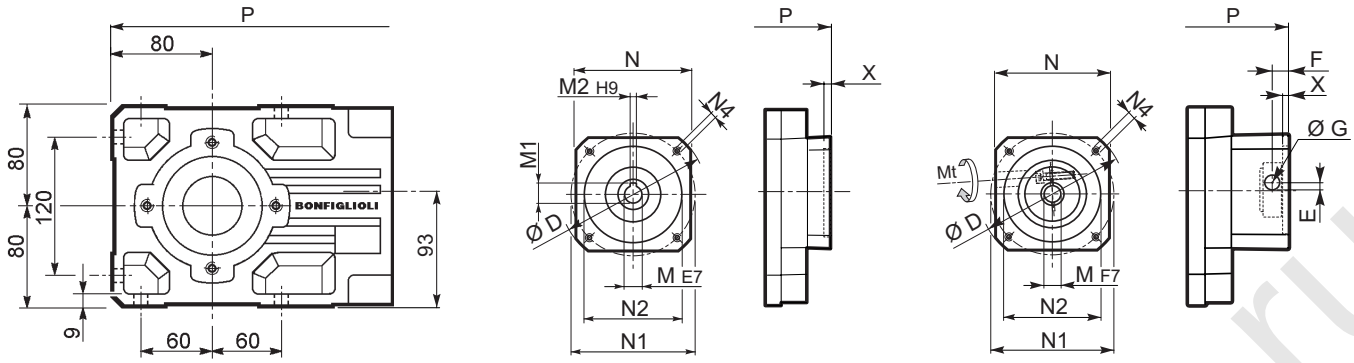

SK...

SC...

		D	M	M1	M2	N	N1	N2	N4	X	P 2x	P 3x	Kg
A 20 2/3	**SK60A**	102	11	12.8	4	82	75	60	M5x10	3.5	277.5	333	11/12
A 20 2/3	**SK60B**	102	14	16.3	5	82	75	60	M5x10	4	284.5	340	12/13
A 20 2/3	**SK80A**	115	14	16.3	5	90	100	80	M6x12	4	284.5	340	12/13
A 20 2/3	**SK80C**	120	19	21.8	6	96	100	80	M6x12	4	325.5	381	13/14
A 20 2/3	**SK95A**	130	14	16.3	5	102	115	95	M8x12	4	325.5	381	13/14
A 20 2/3	**SK95B**	130	19	21.8	6	102	115	95	M8x12	4	325.5	381	13/14
A 20 2/3	**SK95C**	130	24	27.3	8	102	115	95	M8x12	4	325.5	381	13/14
A 20 2/3	**SK110A**	150	19	21.8	6	120	130	110	M8x12	5	325.5	381	13/14
A 20 2/3	**SK110B**	150	24	27.3	8	120	130	110	M8x12	5	325.5	381	13/14

		Mt	D	E	F	G	M	N	N1	N2	N4	X	P 2x	P 3x	Kg
A 20 2/3	**SC60A**	M6 15 Nm	102	7	12.5	12.5	11	82	75	60	M5x10	4	304.5	360	12/13
A 20 2/3	**SC60B**	M6 15 Nm	102	7	12.5	12.5	14	82	75	60	M5x10	4	304.5	360	13/14
A 20 2/3	**SC80A**	M6 15 Nm	115	6	12.5	12.5	14	90	100	80	M6x12	4	304.5	360	13/14
A 20 2/3	**SC80C**	M6 15 Nm	120	15.5	14.5	17.75	19	96	100	80	M6x12	4	349	404.5	14/15
A 20 2/3	**SC95A**	M6 15 Nm	130	16.5	15	17.75	14	102	115	95	M8x16	4	349	404.5	14/15
A 20 2/3	**SC95B**	M6 15 Nm	130	16.5	15	17.75	19	102	115	95	M8x16	4	349	404.5	14/15
A 20 2/3	**SC95C**	M6 15 Nm	130	16.5	15	17.75	24	102	115	95	M8x16	4	349	404.5	14/15
A 20 2/3	**SC110A**	M6 15 Nm	150	16.5	16	17.75	19	120	130	110	M8x16	5	349	404.5	15/16
A 20 2/3	**SC110B**	M6 15 Nm	150	16.5	16	17.75	24	120	130	110	M8x16	5	349	404.5	15/16

A 20...F...

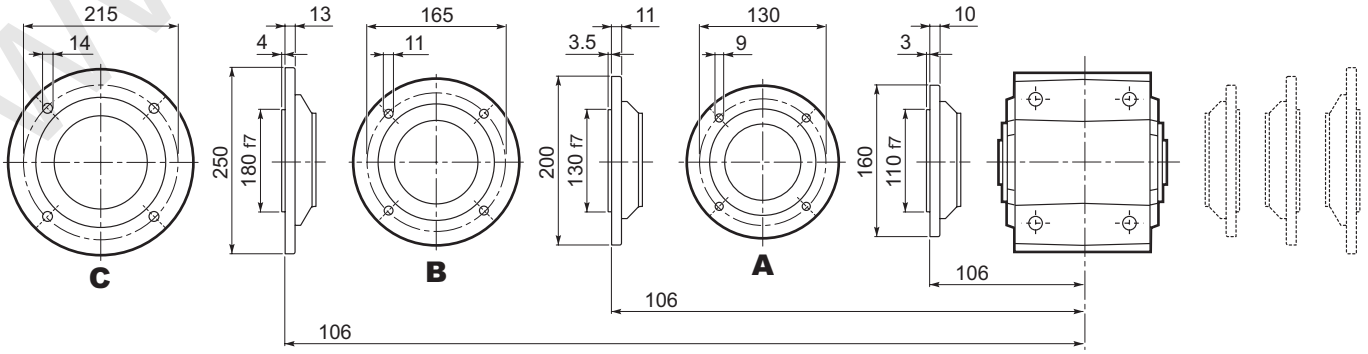

www.redukto-r-nex.ru

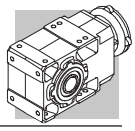

A 20...UR

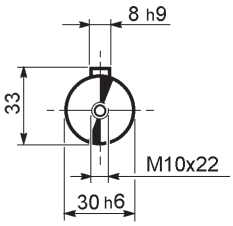

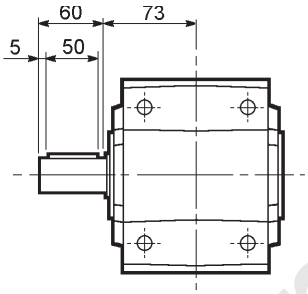

A 20...UD

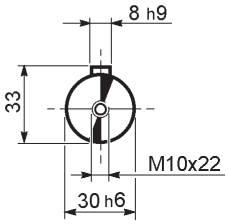

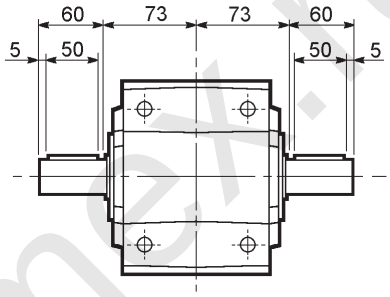

A 20...UH

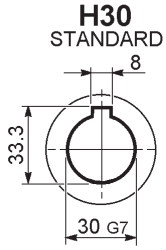

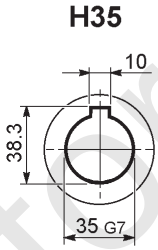

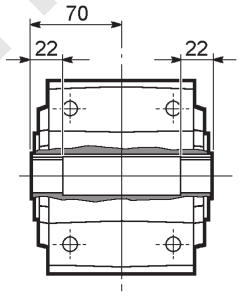

A 20...US

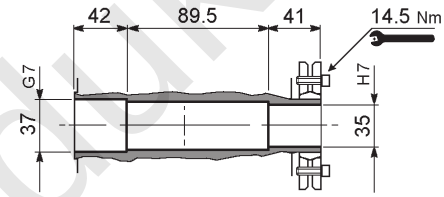

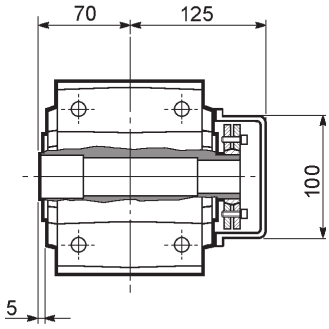

A 20...QF

	Ø
QF25	25
QF30	30

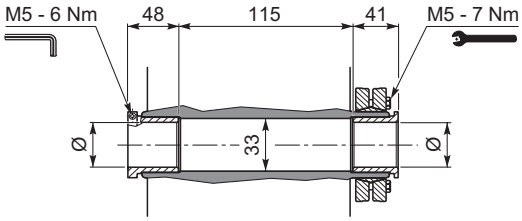

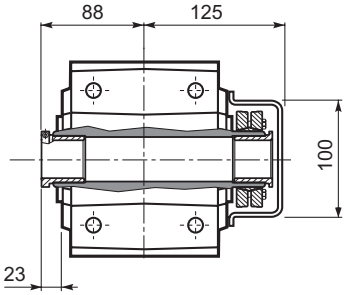

A 20...UV

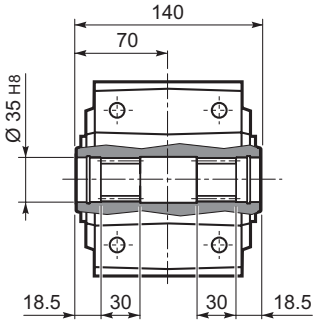

www.redukt-or-mex.ru

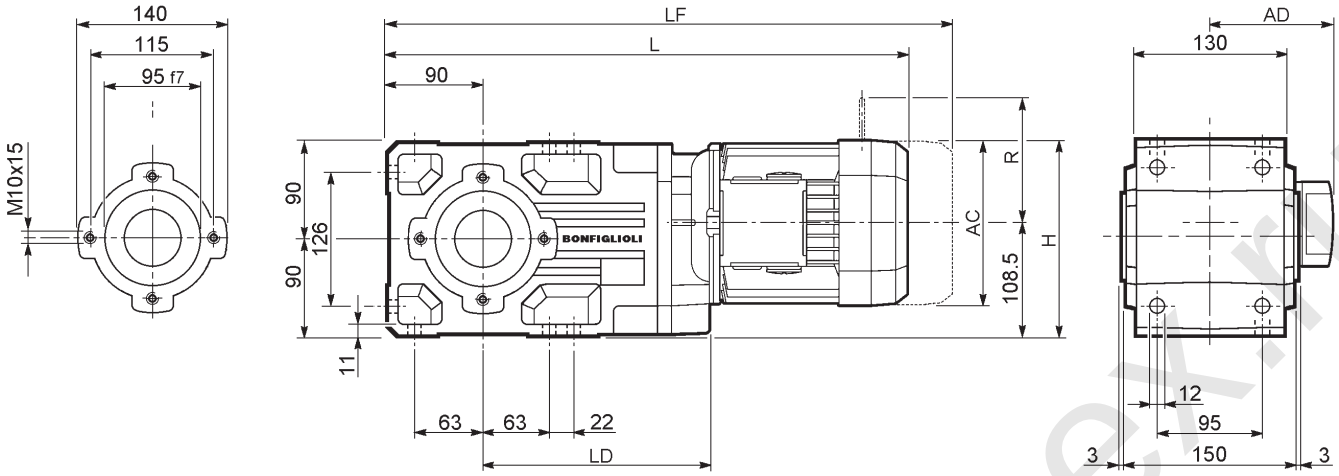

									M_FD M_FA		M_FD		M_FA	
			AC	H	L	LD	AD	Kg	LF	Kg	R	AD	R	AD
A 30 2	**S1**	**M1S**	138	177.5	464	201	108	20	527	23	103	132	124	108
A 30 2	**S1**	**M1L**	138	177.5	488	201	108	22	549	24	103	132	124	108
A 30 2	**S2**	**M2S**	156	186.5	517	213	119	25	587	29	129	143	134	119
A 30 2	**S3**	**M3S**	195	206	560	223	142	30	656	38	160	155	160	142
A 30 2	**S3**	**M3L**	195	206	592	223	142	38	683	45	160	155	160	142
A 30 3	**S05**	**M05**	121	169	516.5	—	95	21	582.5	22	96	119	116	95
A 30 3	**S1**	**M1S**	138	177.5	521.5	—	108	21	584.5	24	103	132	124	108
A 30 3	**S1**	**M1L**	138	177.5	545.5	—	108	23	606.5	26	103	132	124	108
A 30 3	**S2**	**M2S**	156	186.5	574.5	—	119	25	644.5	29	129	143	134	119
A 30 3	**S3**	**M3S**	195	206	617.5	—	142	30	713.5	38	160	155	160	142
A 30 3	**S3**	**M3L**	195	206	649.5	—	142	38	740.5	45	160	155	160	142

www.reduktor-mex.ru

A 30...P(IEC)

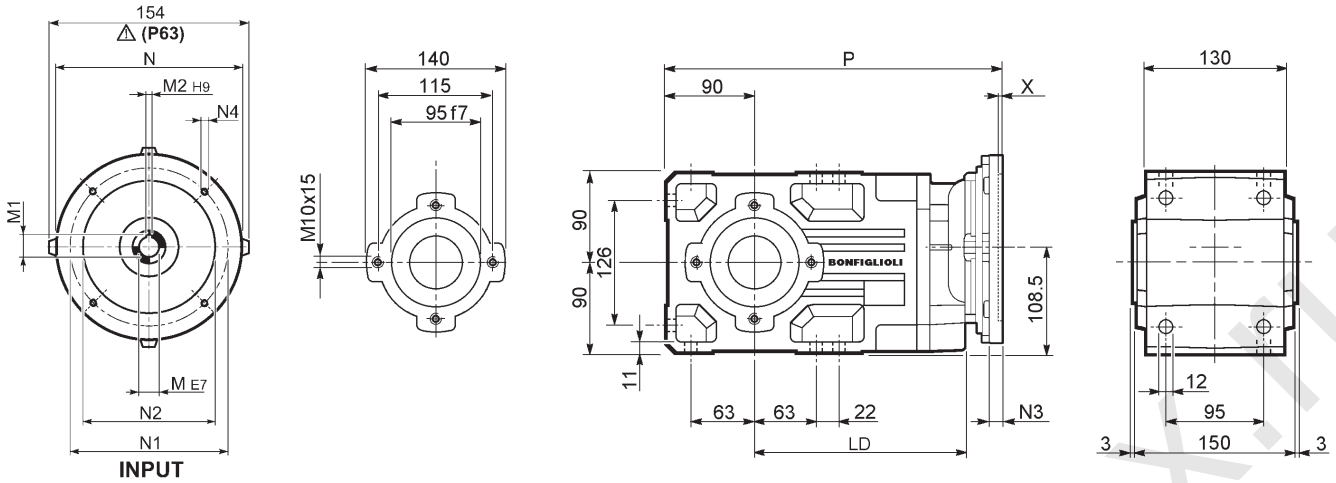

		LD	M	M1	M2	N	N1	N2	N3	N4	X	P	Kg
A 30 2	**P63**	213	11	12.8	4	140	115	95	—	M8x19	4	333	16
A 30 2	**P71**	213	14	16.3	5	160	130	110	—	M8x16	4.5	333	16
A 30 2	**P80**	223	19	21.8	6	200	165	130	—	M10x12	4	352.5	17
A 30 2	**P90**	223	24	27.3	8	200	165	130	—	M10x12	4	352.5	17
A 30 2	**P100**	223	28	31.3	8	250	215	180	—	M12x16	4.5	362.5	20
A 30 2	**P112**	223	28	31.3	8	250	215	180	—	M12x16	4.5	362.5	20
A 30 3	**P63**	—	11	12.8	4	140	115	95	—	M8x19	4	390.5	17
A 30 3	**P71**	—	14	16.3	5	160	130	110	—	M8x16	4.5	390.5	17
A 30 3	**P80**	—	19	21.8	6	200	165	130	—	M10x12	4	410	18
A 30 3	**P90**	—	24	27.3	8	200	165	130	—	M10x12	4	410	18
A 30 3	**P100**	—	28	31.3	8	250	215	180	—	M12x16	4.5	420	22
A 30 3	**P112**	—	28	31.3	8	250	215	180	—	M12x16	4.5	420	22

A 30...HS

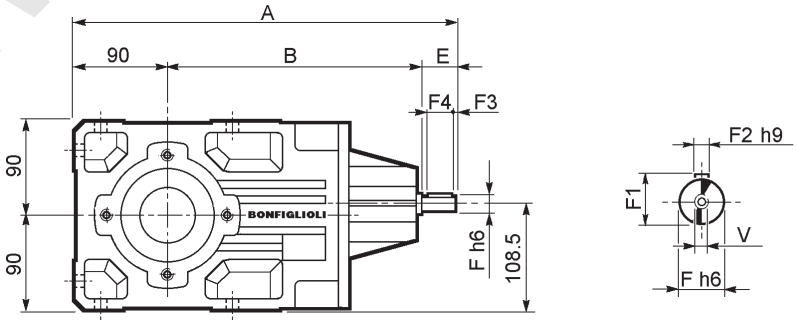

		A	B	E	F	F1	F2	F3	F4	V	Kg
A 30 2	**HS**	383	253	40	19	21.5	6	2.5	35	M6x16	16.7
A 30 3		397.5	267.5	40	16	18	5	2.5	35	M6x16	16.5

www.reduktor-mex.ru

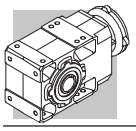

A 30...SK / SC

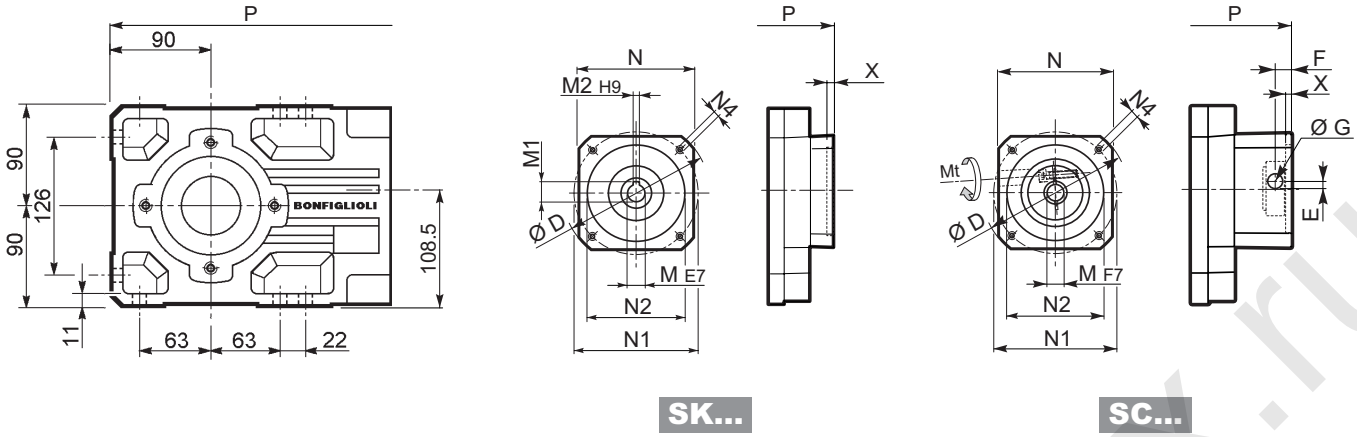

		D	M	M1	M2	N	N1	N2	N4	X	P 2x	P 3x	Kg
A30 2/3	**SK60A**	102	11	12.8	4	82	75	60	M5x10	3.5	304.5	362	15/16
A30 2/3	**SK60B**	102	14	16.3	5	82	75	60	M5x10	4	311.5	369	16/17
A30 2/3	**SK80A**	115	14	16.3	5	90	100	80	M6x12	4	311.5	369	16/17
A30 2/3	**SK80C**	120	19	21.8	6	96	100	80	M6x12	4	352.5	410	17/18
A30 2/3	**SK95A**	130	14	16.3	5	102	115	95	M8x12	4	352.5	410	17/18
A30 2/3	**SK95B**	130	19	21.8	6	102	115	95	M8x12	4	352.5	410	17/18
A30 2/3	**SK95C**	130	24	27.3	8	102	115	95	M8x12	4	352.5	410	17/18
A30 2/3	**SK110A**	150	19	21.8	6	120	130	110	M8x12	5	352.5	410	17/18
A30 2/3	**SK110B**	150	24	27.3	8	120	130	110	M8x12	5	352.5	410	17/18
A30 2	**SK130A**	188	24	27.3	8	142	165	130	M10x20	5	352.5	—	18

		Mt	D	E	F	G	M	N	N1	N2	N4	X	P 2x	P 3x	Kg
A30 2/3	**SC60A**	M6 15 Nm	102	7	12.5	12.5	11	82	75	60	M5x10	4	331.5	389	16/17
A30 2/3	**SC60B**	M6 15 Nm	102	7	12.5	12.5	14	82	75	60	M5x10	4	331.5	389	17/18
A30 2/3	**SC80A**	M6 15 Nm	115	6	12.5	12.5	14	90	100	80	M6x12	4	331.5	389	17/18
A30 2/3	**SC80C**	M6 15 Nm	120	15.5	14.5	17.75	19	96	100	80	M6x12	4	376	433.5	18/19
A30 2/3	**SC95A**	M6 15 Nm	130	16.5	15	17.75	14	102	115	95	M8x16	4	376	433.5	18/19
A30 2/3	**SC95B**	M6 15 Nm	130	16.5	15	17.75	19	102	115	95	M8x16	4	376	433.5	18/19
A30 2/3	**SC95C**	M6 15 Nm	130	16.5	15	17.75	24	102	115	95	M8x16	4	376	433.5	18/19
A30 2/3	**SC 110A**	M6 15 Nm	150	16.5	16	17.75	19	120	130	110	M8x16	5	376	433.5	19/20
A30 2/3	**SC 110B**	M6 15 Nm	150	16.5	16	17.75	24	120	130	110	M8x16	5	376	433.5	19/20
A30 2	**SC 130A**	M6 15 Nm	188	19	16	17.75	24	142	165	130	M10x20	5	376	—	20

A 30...F...

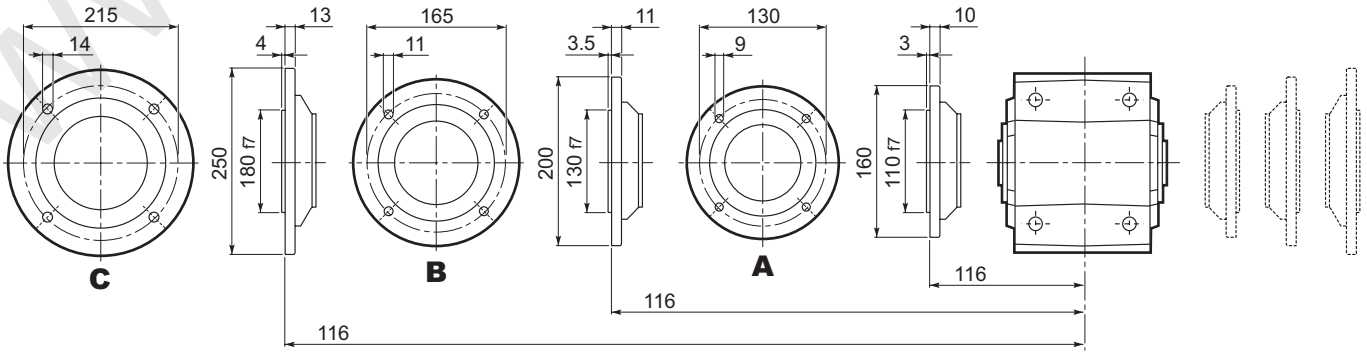

www.redukTor-mex.ru

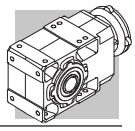

A 30...UR

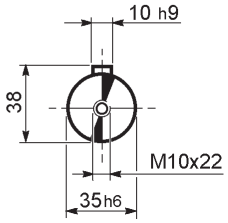

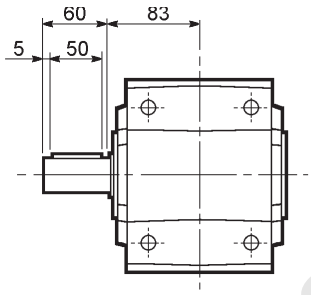

A 30...UD

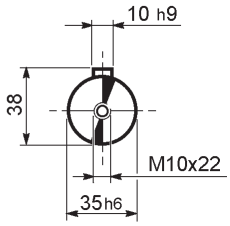

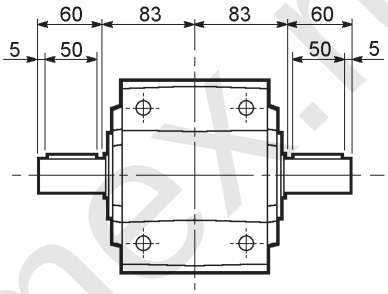

A 30...UH

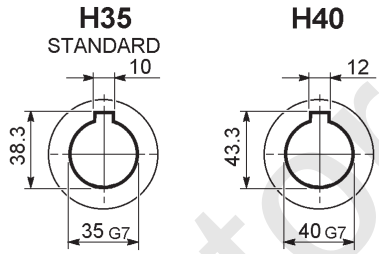

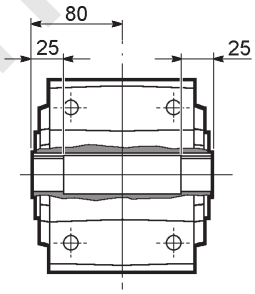

A 30...US

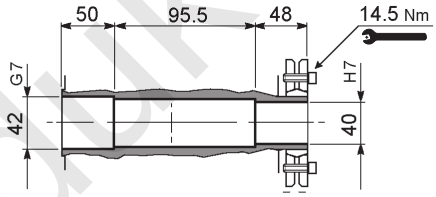

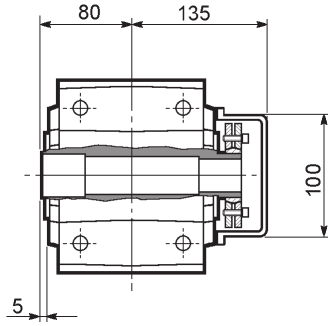

A 30...QF

	Ø
QF30	30
QF35	35
QF40	40

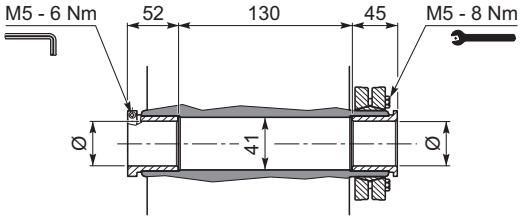

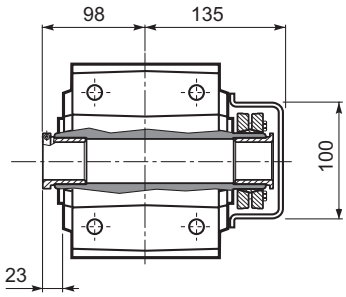

A 30...UV

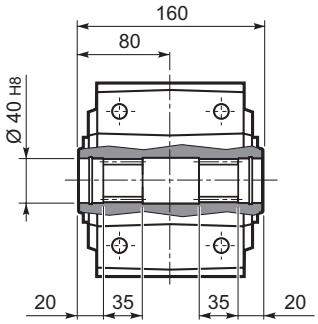

www.redukt-mex.ru

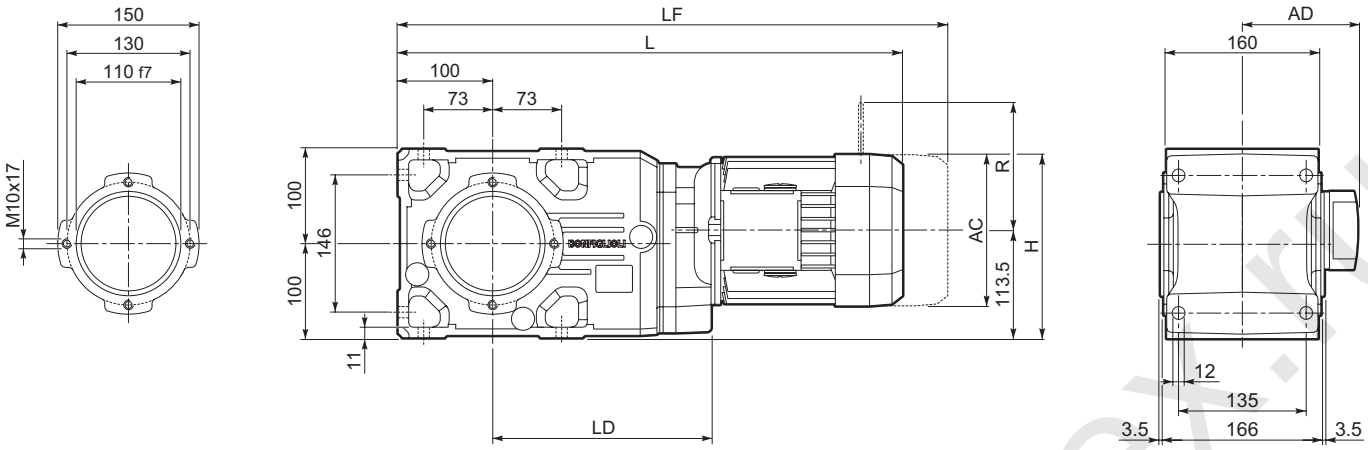

									M_FD M_FA		M_FD		M_FA	
			AC	H	L	LD	AD	Kg	LF	Kg	R	AD	R	AD
A 35 2	**S1**	**M1S**	138	182.5	490.5	217.5	108	32	553.5	35	103	132	124	108
A 35 2	**S1**	**M1L**	138	182.5	514.5	217.5	108	34	575.5	36	103	132	124	108
A 35 2	**S2**	**M2S**	156	191.5	543.5	229.5	119	37	613.5	41	129	143	134	119
A 35 2	**S3**	**M3S**	195	211	586.5	239.5	142	42	682.5	50	160	155	160	142
A 35 2	**S3**	**M3L**	195	211	618.5	239.5	142	50	709.5	57	160	155	160	142
A 35 2	**S4**	**M4S**	258	242.5	726.5	—	193	57	835.5	70	204	193	200	193
A 35 2	**S4**	**M4L**	258	242.5	726.5	—	193	63	835.5	76	204	193	200	193
A 35 3	**S05**	**M05S**	121	174	543	—	95	33	609	34	96	119	116	95
A 35 3	**S1**	**M1S**	138	182.5	548	—	108	33	611	36	103	132	124	108
A 35 3	**S1**	**M1L**	138	182.5	572	—	108	35	633	38	103	132	124	108
A 35 3	**S2**	**M2S**	156	191.5	601	—	119	37	671	41	129	143	134	119
A 35 3	**S3**	**M3S**	195	211	644	—	293	42	740	50	160	155	160	142
A 35 3	**S3**	**M3L**	195	211	676	—	325	50	767	57	160	155	160	142

www.reduktor-mex.ru

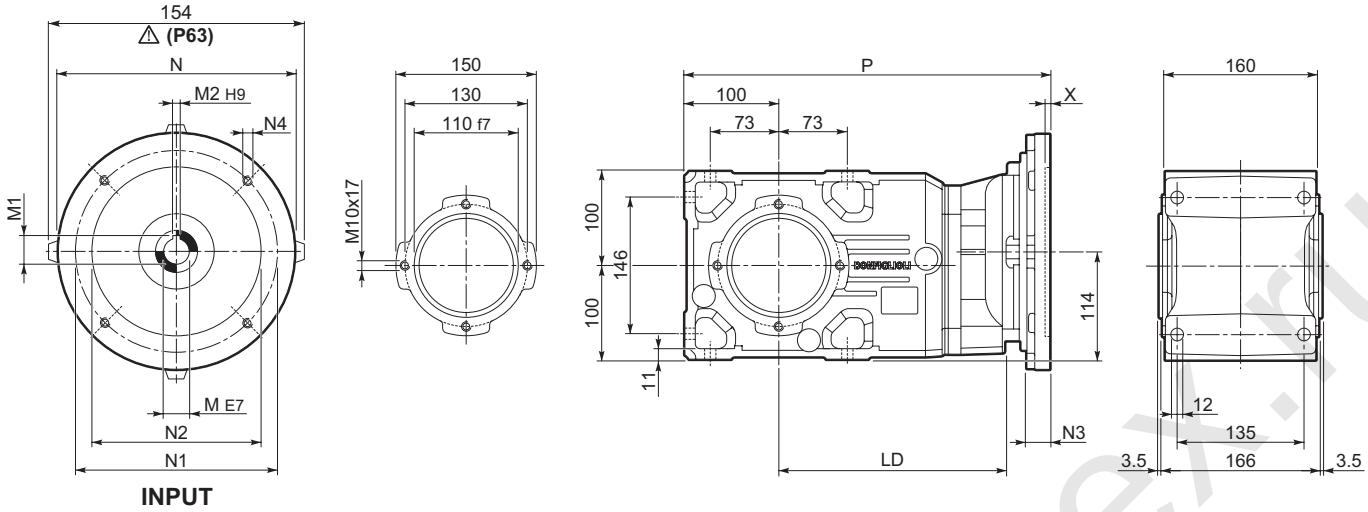

		LD	M	M1	M2	N	N1	N2	N3	N4	X	P	Kg
A 35 2	**P63**	229.5	11	12.8	4	140	115	95	—	M8x19	4	359.5	28
A 35 2	**P71**	229.5	14	16.3	5	160	130	110	—	M8x16	4.5	359.5	28
A 35 2	**P80**	239.5	19	21.8	6	200	165	130	—	M10x12	4	379	29
A 35 2	**P90**	239.5	24	27.3	8	200	165	130	—	M10x12	4	379	29
A 35 2	**P100**	239.5	28	31.3	8	250	215	180	—	M12x16	4.5	389	32
A 35 2	**P112**	239.5	28	31.3	8	250	215	180	—	M12x16	4.5	389	32
A 35 2	**P132**	—	38	41.3	10	300	265	230	16	14	5	425.5	35
A 35 3	**P63**	—	11	12.8	4	140	115	95	—	M8x19	4	417	29
A 35 3	**P71**	—	14	16.3	5	160	130	110	—	M8x16	4.5	417	29
A 35 3	**P80**	—	19	21.8	6	200	165	130	—	M10x12	4	436.5	30
A 35 3	**P90**	—	24	27.3	8	200	165	130	—	M10x12	4	436.5	30
A 35 3	**P100**	—	28	31.3	8	250	215	180	—	M12x16	4.5	446.5	34
A 35 3	**P112**	—	28	31.3	8	250	215	180	—	M12x16	4.5	446.5	34

A 35...HS

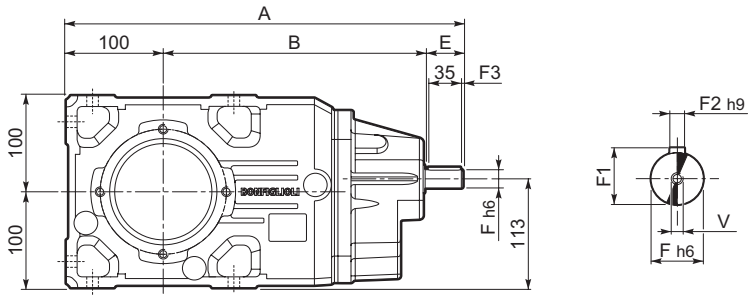

		A	B	E	F	F1	F2	F3	F4	V	Kg
A 35 2	**HS**	409.5	269.5	40	19	21.5	6	2.5	35	M6x16	29
A 35 3		424	284	40	19	18	5	2.5	35	M6x16	29

www.redukt or-mex.ru

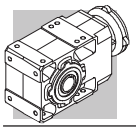

A 35...SK / SC

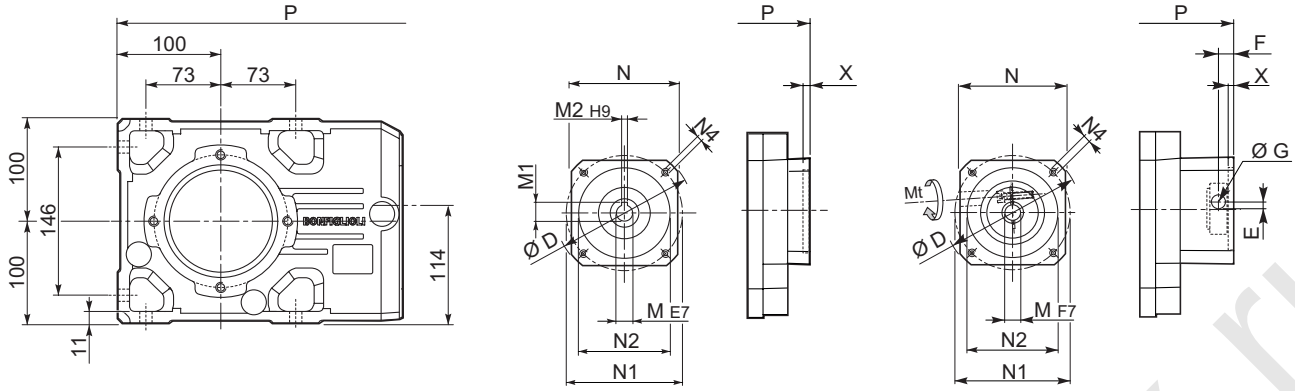

SK...

SC...

		D	M	M1	M2	N	N1	N2	N4	X	P 2x	P 3x	Kg
A35 2/3	**SK60A**	102	11	12.8	4	82	75	60	M5x10	3.5	331	388.5	27/28
A35 2/3	**SK60B**	102	14	16.3	5	82	75	60	M5x10	4	338	395.5	28/29
A35 2/3	**SK80A**	115	14	16.3	5	90	100	80	M6x12	4	338	395.5	28/29
A35 2/3	**SK80C**	120	19	21.8	6	96	100	80	M6x12	4	379	436.5	29/30
A35 2/3	**SK95A**	130	14	16.3	5	102	115	95	M8x12	4	379	436.5	29/30
A35 2/3	**SK95B**	130	19	21.8	6	102	115	95	M8x12	4	379	436.5	29/30
A35 2/3	**SK95C**	130	24	27.3	8	102	115	95	M8x12	4	379	436.5	29/30
A35 2/3	**SK110A**	150	19	21.8	6	120	130	110	M8x12	5	379	436.5	29/30
A35 2/3	**SK110B**	150	24	27.3	8	120	130	110	M8x12	5	379	436.5	29/30
A35 2	**SK130A**	188	24	27.3	8	142	165	130	M10x20	5	379	—	30

		Mt	D	E	F	G	M	N	N1	N2	N4	X	P 2x	P 3x	Kg
A35 2/3	**SC60A**	M6 15 Nm	102	7	12.5	12.5	11	82	75	60	M5x10	4	358	415.5	28/29
A35 2/3	**SC60B**	M6 15 Nm	102	7	12.5	12.5	14	82	75	60	M5x10	4	358	415.5	29/30
A35 2/3	**SC80A**	M6 15 Nm	115	6	12.5	12.5	14	90	100	80	M6x12	4	358	415.5	29/30
A35 2/3	**SC80C**	M6 15 Nm	120	15.5	14.5	17.75	19	96	100	80	M6x12	4	402.5	460	30/31
A35 2/3	**SC95A**	M6 15 Nm	130	16.5	15	17.75	14	102	115	95	M8x16	4	402.5	460	30/31
A35 2/3	**SC95B**	M6 15 Nm	130	16.5	15	17.75	19	102	115	95	M8x16	4	402.5	460	30/31
A35 2/3	**SC95C**	M6 15 Nm	130	16.5	15	17.75	24	102	115	95	M8x16	4	402.5	460	30/31
A35 2/3	**SC110A**	M6 15 Nm	150	16.5	16	17.75	19	120	130	110	M8x16	5	402.5	460	32/33
A35 2/3	**SC110B**	M6 15 Nm	150	16.5	16	17.75	24	120	130	110	M8x16	5	402.5	460	32/33
A35 2	**SC130A**	M6 15 Nm	188	19	16	17.75	24	142	165	130	M10x20	5	402.5	—	33

A 35...F...

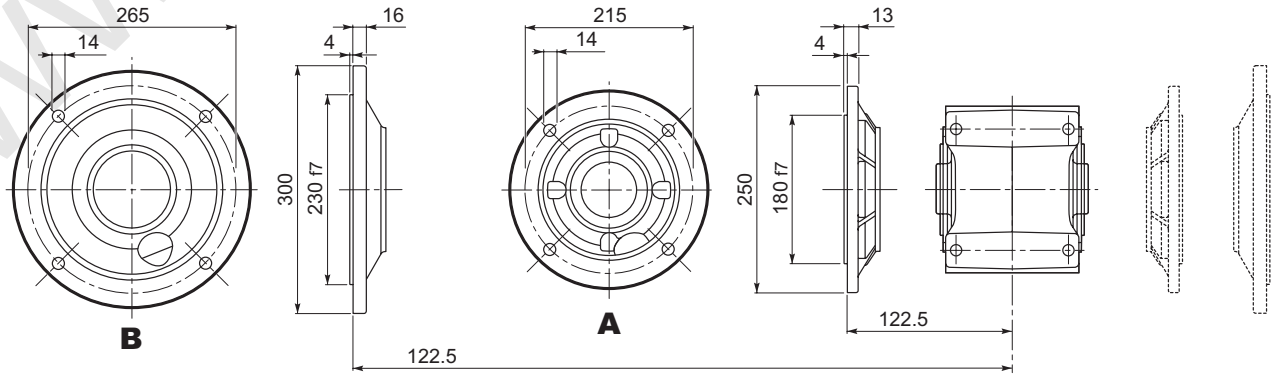

www.redukTor-mex.ru

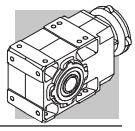

A 35...UR

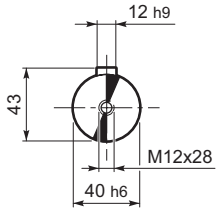

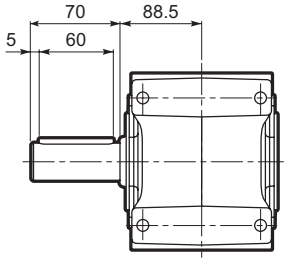

A 35...UD

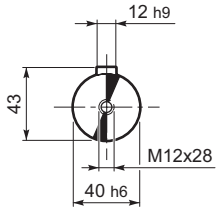

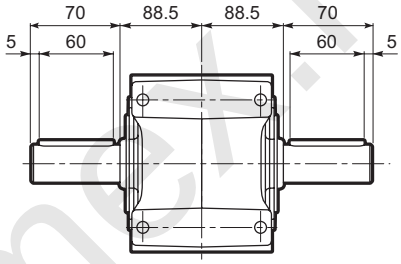

A 35...UH

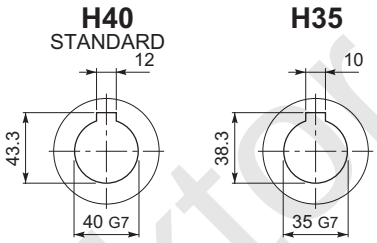

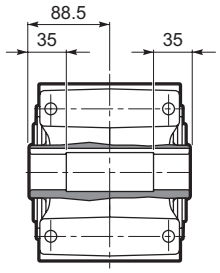

A 35...US

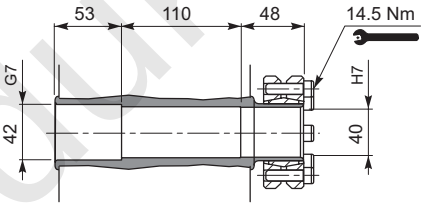

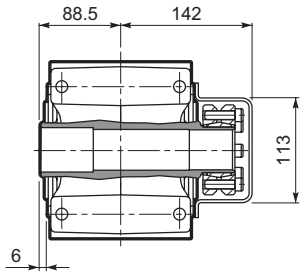

A 35...QF

	Ø
QF30	30
QF35	35
QF40	40

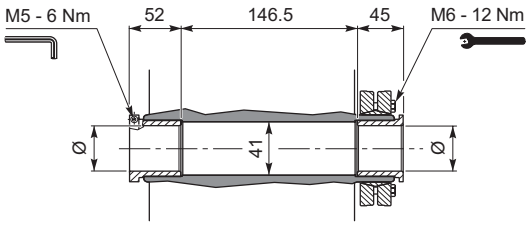

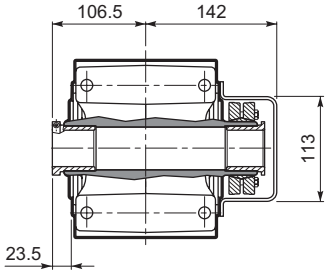

A 35...UV

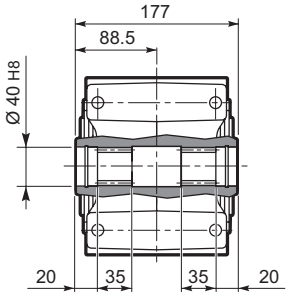

www.redukter-mex.ru

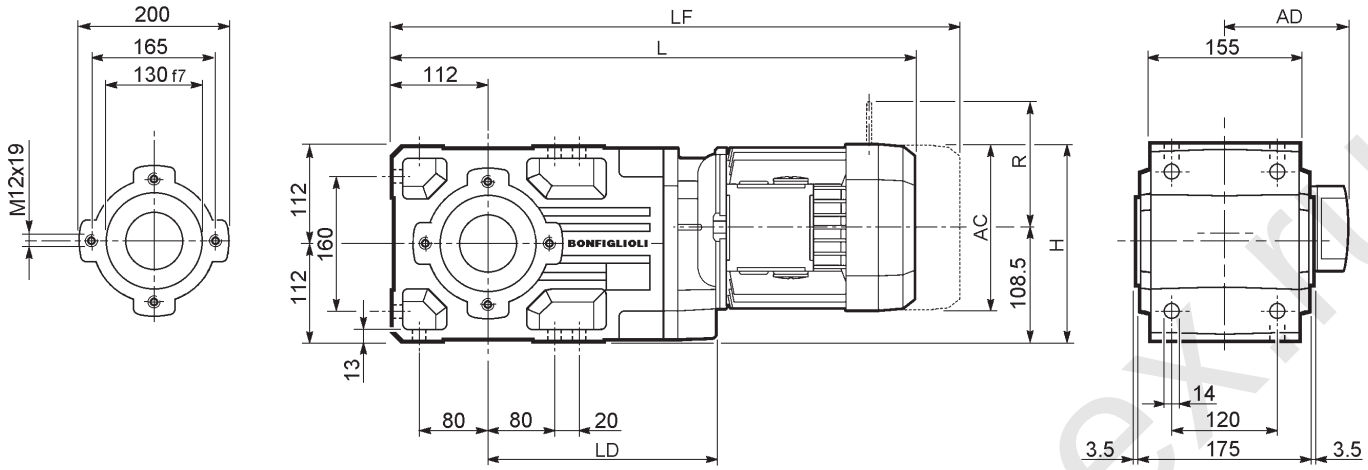

									M_FD M_FA		M_FD		M_FA	
			AC	H	L	LD	AD	Kg	LF	Kg	R	AD	R	AD
A 41 2	**S1**	**M1S**	138	198.5	506	216.5	108	40	569	43	103	132	124	108
A 41 2	**S1**	**M1L**	138	198.5	530	216.5	108	41	591	44	103	132	124	108
A 41 2	**S2**	**M2S**	156	207.5	559	232	119	45	629	49	129	143	134	119
A 41 2	**S3**	**M3S**	195	227	602	248	142	50	698	58	160	155	160	142
A 41 2	**S3**	**M3L**	195	227	634	248	142	58	725	65	160	155	160	142
A 41 2	**S4**	**M4**	258	258.5	742	—	193	92	851	110	226	193	217	193
A 41 3	**S05**	**M05**	121	245	562.5	—	95	44	628.5	46	96	119	116	95
A 41 3	**S1**	**M1S**	138	198.5	567.5	—	108	45	630.5	48	103	132	124	108
A 41 3	**S1**	**M1L**	138	198.5	591.5	—	108	46	652.5	49	103	132	124	108
A 41 3	**S2**	**M2S**	156	207.5	620.5	—	119	50	690.5	58	129	143	134	119
A 41 3	**S3**	**M3S**	195	227	663.5	—	142	55	759.5	62	160	155	160	142
A 41 3	**S3**	**M3L**	195	227	695.5	—	142	61	786.5	68	160	155	160	142

www.reduktor-mex.ru

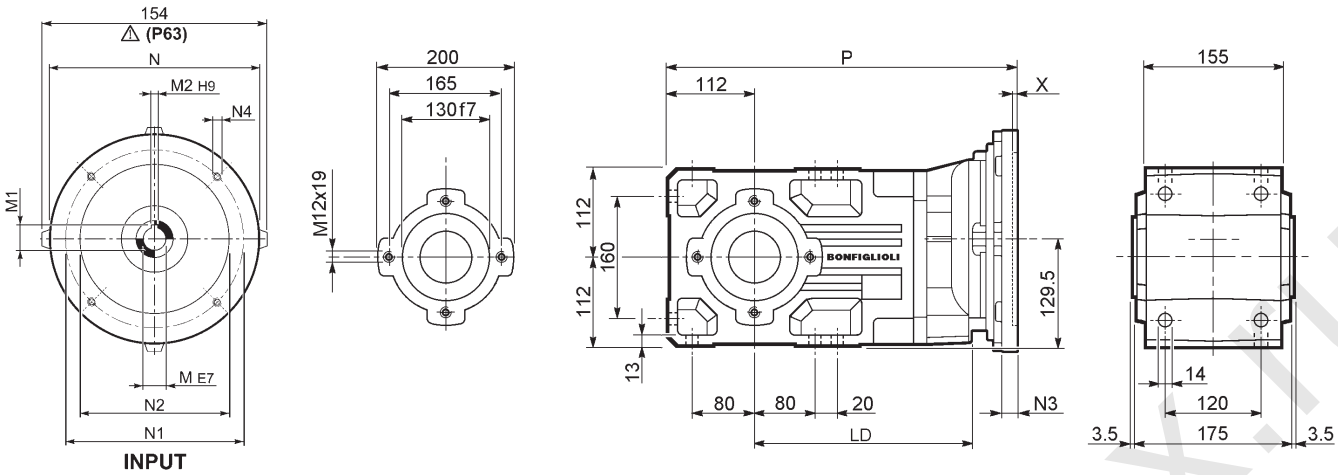

		LD	M	M1	M2	N	N1	N2	N3	N4	X	P	Kg
A 41 2	**P63**	232	11	12.8	4	140	115	95	—	M8x19	4	375	37
A 41 2	**P71**	232	14	16.3	5	160	130	110	—	M8x16	4.5	375	38
A 41 2	**P80**	248	19	21.8	6	200	165	130	—	M10x12	4	394.5	39
A 41 2	**P90**	248	24	27.3	8	200	165	130	—	M10x12	4	394.5	39
A 41 2	**P100**	—	28	31.3	8	250	215	180	—	M12x16	4.5	404.5	43
A 41 2	**P112**	—	28	31.3	8	250	215	180	—	M12x16	4.5	404.5	43
A 41 2	**P132**	—	38	41.3	10	300	265	230	16	14	5	441	46
A 41 3	**P63**	—	11	12.8	4	140	115	95	—	M8x19	4	436.5	39
A 41 3	**P71**	—	14	16.3	5	160	130	110	—	M8x16	4.5	436.5	39
A 41 3	**P80**	—	19	21.8	6	200	165	130	—	M10x12	4	456	40
A 41 3	**P90**	—	24	27.3	8	200	165	130	—	M10x12	4	456	40
A 41 3	**P100**	—	28	31.3	8	250	215	180	—	M12x16	4.5	466	44
A 41 3	**P112**	—	28	31.3	8	250	215	180	—	M12x16	4.5	466	44

A 41...HS

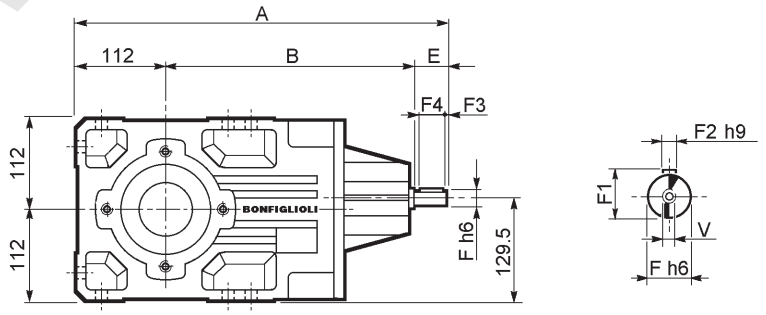

		A	B	E	F	F1	F2	F3	F4	V	Kg
A 41 2	**HS**	464	302.5	50	24	27	8	2.5	45	M8x19	40.7
A 41 3		486.5	334.5	40	19	21.5	6	2.5	35	M6x16	39.5

www.redukt-mex.ru

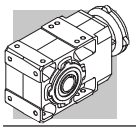

A 41...SK / SC

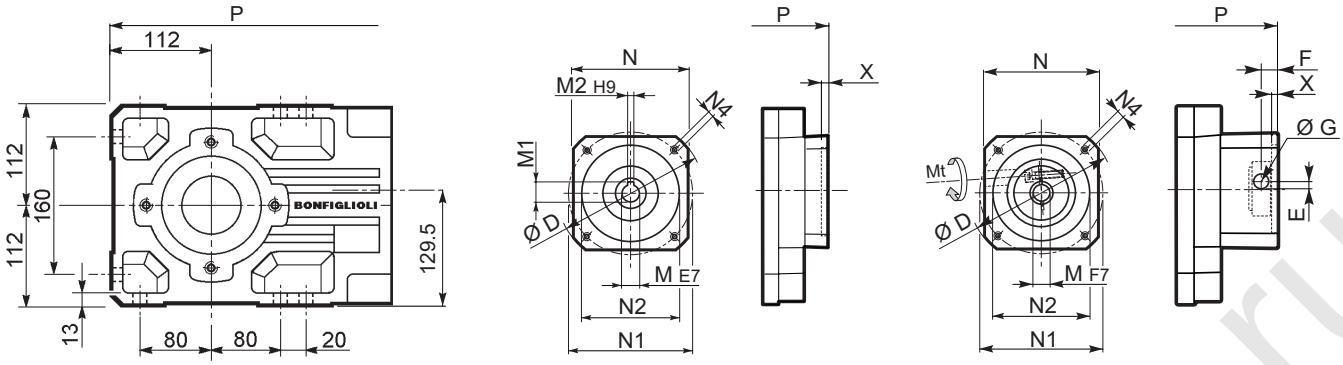

SK...

SC...

		D	M	M1	M2	N	N1	N2	N4	X	P 2x	P 3x	Kg
A41 3	**SK60A**	102	11	12.8	4	82	75	60	M5x10	3.5	—	408	40
A41 3	**SK60B**	102	14	16.3	5	82	75	60	M5x10	4	—	415	40
A41 3	**SK80A**	115	14	16.3	5	90	100	80	M6x12	4	—	415	40
A41 2	**SK80B**	120	14	16.3	5	96	100	80	M6x12	4	394.5	—	39
A41 2/3	**SK80C**	120	19	21.8	6	96	100	80	M6x12	4	394.5	456	39/40
A41 2/3	**SK95A**	130	14	16.3	5	102	115	95	M8x12	4	394.5	456	39/40
A41 2/3	**SK95B**	130	19	21.8	6	102	115	95	M8x12	4	394.5	456	39/41
A41 2/3	**SK95C**	130	24	27.3	8	102	115	95	M8x12	4	394.5	456	39/44
A41 2/3	**SK110A**	150	19	21.8	6	120	130	110	M8x12	5	394.5	456	39/44
A41 2/3	**SK110B**	150	24	27.3	8	120	130	110	M8x12	5	394.5	456	39/44
A41 2	**SK130A**	188	24	27.3	8	142	165	130	M10x20	5	394.5	—	41
A41 2	**SK130B**	189	32	35.3	10	160	165	130	M10x20	5	441	—	43
A41 2	**SK180A**	240	32	35.3	10	192	215	180	M12x19	5	441	—	43
A41 2	**SK180B**	240	38	41.3	10	192	215	180	M12x19	5	441	—	43

		Mt	D	E	F	G	M	N	N1	N2	N4	X	P 2x	P 3x	Kg
A41 3	**SC60A**	M6 15 Nm	102	7	12.5	12.5	11	82	75	60	M5x10	4	—	435	41
A41 3	**SC60B**	M6 15 Nm	102	7	12.5	12.5	14	82	75	60	M5x10	4	—	435	41
A41 3	**SC80A**	M6 15 Nm	115	6	12.5	12.5	14	90	100	80	M6x12	4	—	435	41
A41 2	**SC80B**	M6 15 Nm	120	15.5	14.5	17.75	14	96	100	80	M6x12	4	418	—	40
A41 2/3	**SC80C**	M6 15 Nm	120	15.5	14.5	17.75	19	96	100	80	M6x12	4	418	479.5	40/41
A41 2/3	**SC95A**	M6 15 Nm	130	16.5	15	17.75	14	102	115	95	M8x16	4	418	479.5	40/42
A41 2/3	**SC95B**	M6 15 Nm	130	16.5	15	17.75	19	102	115	95	M8x16	4	418	479.5	40/42
A41 2/3	**SC95C**	M6 15 Nm	130	16.5	15	17.75	24	102	115	95	M8x16	4	418	479.5	40/43
A41 2/3	**SC110A**	M6 15 Nm	150	16.5	16	17.75	19	120	130	110	M8x16	5	418	479.5	41/47
A41 2/3	**SC110B**	M6 15 Nm	150	16.5	16	17.75	24	120	130	110	M8x16	5	418	479.5	41/47
A41 2	**SC130A**	M6 15 Nm	188	19	16	17.75	24	142	165	130	M10x20	5	418	—	42
A41 2	**SC130B**	M8 36 Nm	189	20	17	17.75	32	160	165	130	M10x20	5	464	—	46
A41 2	**SC180A**	M8 36 Nm	240	20	17.5	17.75	32	192	215	180	M12x24	5	468	—	46
A41 2	**SC180B**	M8 36 Nm	240	20	17.5	17.75	38	192	215	180	M12x24	5	468	—	46

A 41...F...

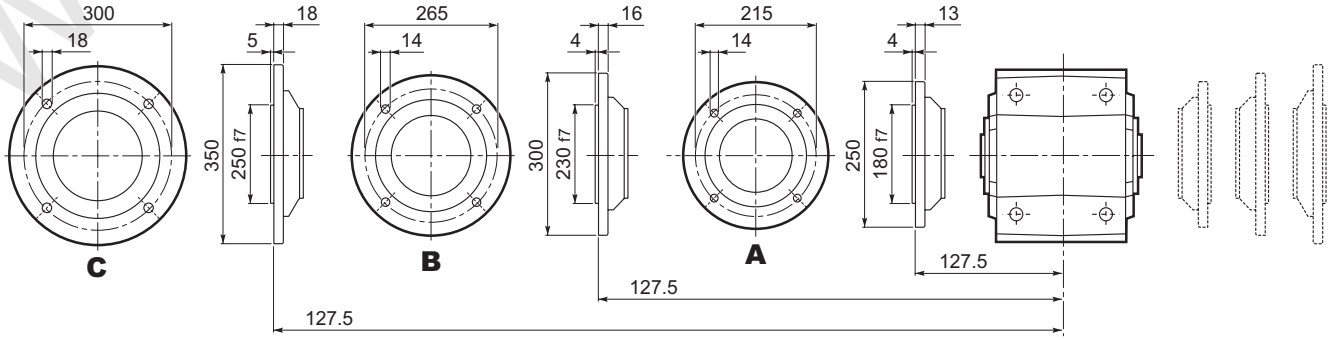

www.redukTor-nex.ru

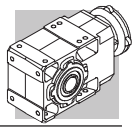

A 41...UR

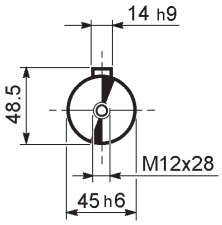

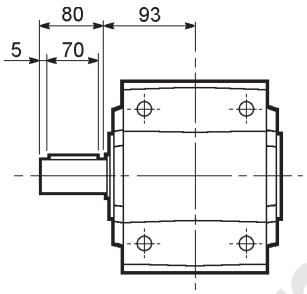

A 41...UD

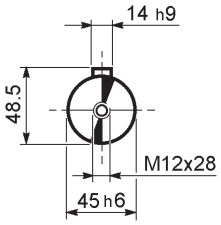

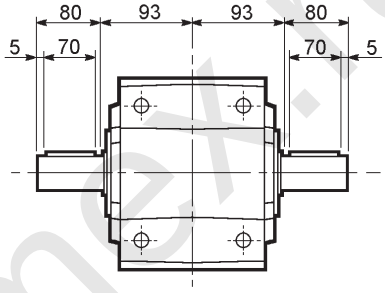

A 41...UH

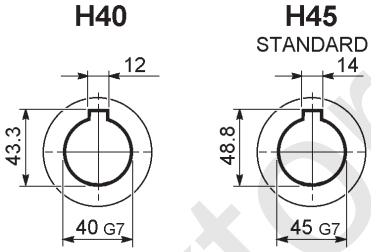

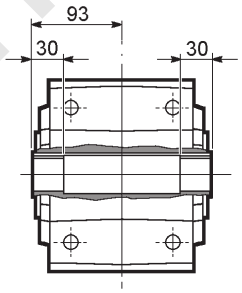

A 41...US

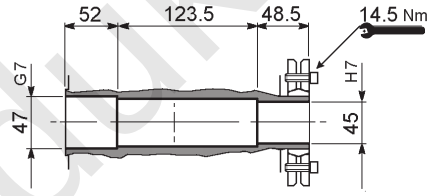

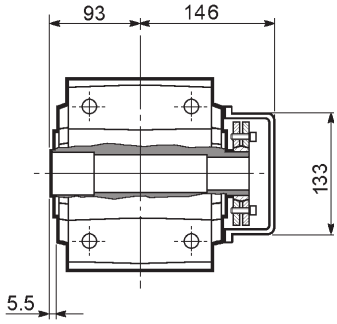

A 41...QF

	Ø
QF40	40
QF45	45

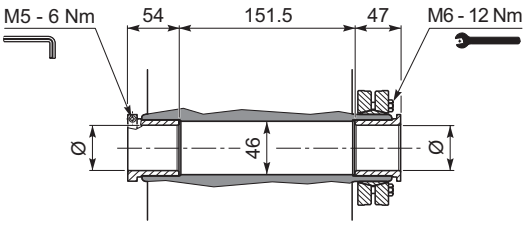

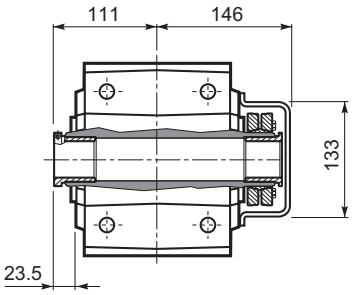

A 41...UV

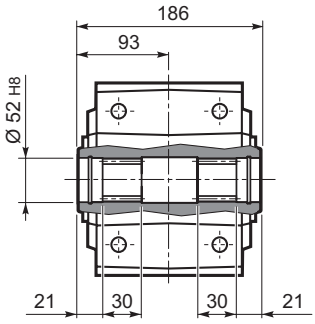

www.redukt0r-mex.ru

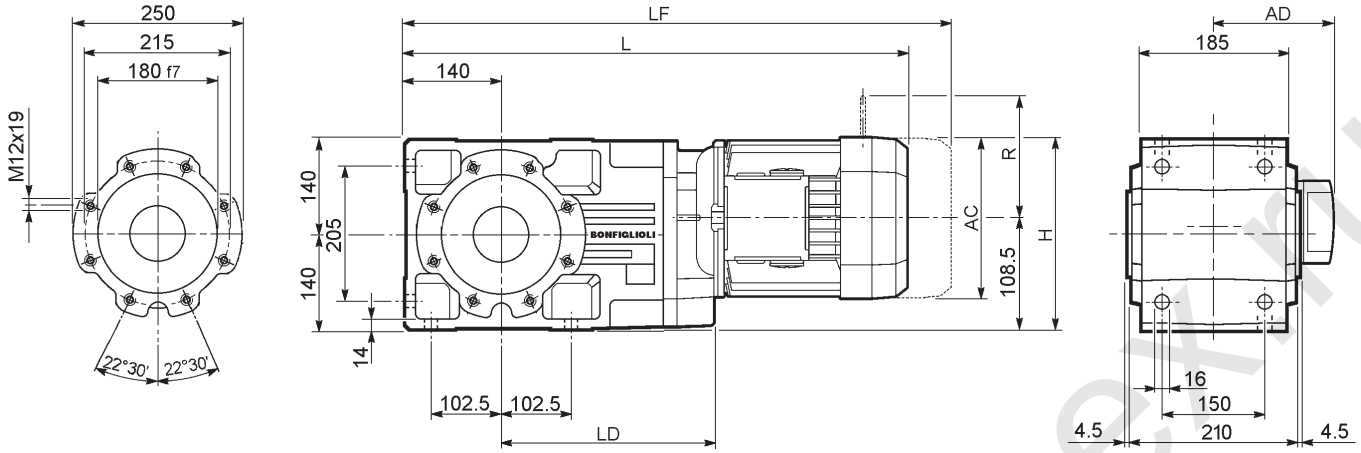

									M_FD M_FA		M_FD		M_FA	
			AC	H	L	LD	AD	Kg	LF	Kg	R	AD	R	AD
A 50 2/3	**S1**	**M1S**	138	223	585.5	—	108	65	648.5	67	103	132	124	108
A 50 2/3	**S1**	**M1L**	138	223	609.5	—	108	66	670.5	69	103	132	124	108
A 50 2/3	**S2**	**M2S**	156	232	638.5	284.5	119	68	708.5	72	129	143	134	119
A 50 2/3	**S3**	**M3S**	195	251.5	681.5	299.5	142	73	777.5	81	160	155	160	142
A 50 2/3	**S3**	**M3L**	195	251.5	713.5	299.5	142	81	804.5	88	160	155	160	142
A 50 2/3	**S4**	**M4**	258	283	821.5	284.5	193	115	930.5	133	226	193	217	193
A 50 2/3	**S4**	**M4LC**	258	283	856.5	284.5	193	123	955.5	141	226	193	217	193
A 50 4	**S1**	**M1S**	138	223	657	—	108	66	720	68	103	132	124	108
A 50 4	**S1**	**M1L**	138	223	681	—	108	67	742	70	103	132	124	108
A 50 4	**S2**	**M2S**	156	232	710	—	119	71	780	75	129	143	134	119
A 50 4	**S3**	**M3S**	195	251.5	753	—	142	76	849	76	160	155	160	142
A 50 4	**S3**	**M3L**	195	251.5	785	—	142	83	876	78	160	155	160	142

www.reduktor-mex.ru

A 50...P(IEC)

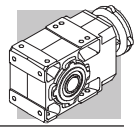

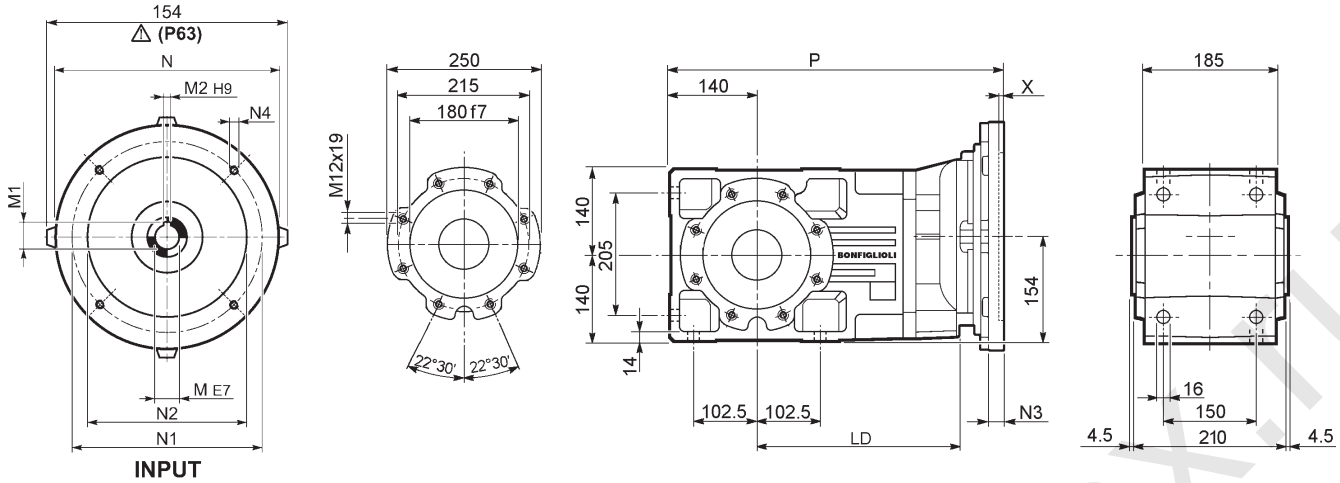

		LD	M	M1	M2	N	N1	N2	N3	N4	X	P	Kg
A 50 2/3	**P63**	284.5	11	12.8	4	140	115	95	—	M8x19	4	454.5	60
A 50 2/3	**P71**	284.5	14	16.3	5	160	130	110	—	M8x16	4.5	454.5	60
A 50 2/3	**P80**	299.5	19	21.8	6	200	165	130	—	M10x12	4	474	61
A 50 2/3	**P90**	299.5	24	27.3	8	200	165	130	—	M10x12	4	474	61
A 50 2/3	**P100**	284.5	28	31.3	8	250	215	180	—	M12x16	4.5	484	65
A 50 2/3	**P112**	284.5	28	31.3	8	250	215	180	—	M12x16	4.5	484	65
A 50 2/3	**P132**	284.5	38	41.3	10	300	265	230	16	14	5	520.5	68
A 50 2/3	**P160**	—	42	45.3	12	350	300	250	23	18	5.5	571	72
A 50 2/3	**P180**	—	48	51.8	14	350	300	250	23	18	5.5	571	72
A 50 4	**P63**	—	11	12.8	4	140	115	95	—	M8x19	4	526	62
A 50 4	**P71**	—	14	16.3	5	160	130	110	—	M8x16	4.5	526	62
A 50 4	**P80**	—	19	21.8	6	200	165	130	—	M10x12	4	545.5	63
A 50 4	**P90**	—	24	27.3	8	200	165	130	—	M10x12	4	545.5	63
A 50 4	**P100**	—	28	31.3	8	250	215	180	—	M12x16	4.5	555.5	67
A 50 4	**P112**	—	28	31.3	8	250	215	180	—	M12x16	4.5	555.5	67

A 50...HS

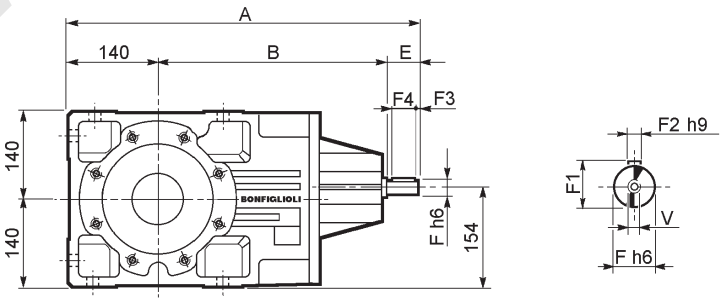

		A	B	E	F	F1	F2	F3	F4	V	Kg
A 50 2		543.5	353.5	50	24	27	8	2.5	45	M8x19	72
A 50 3	**HS**	543.5	353.5	50	24	27	8	2.5	45	M8x19	76
A 50 4		576	396	40	19	21.5	6	2.5	35	M6x16	77

www.redukt-mex.ru

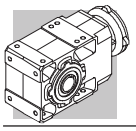

A 50...SK / SC

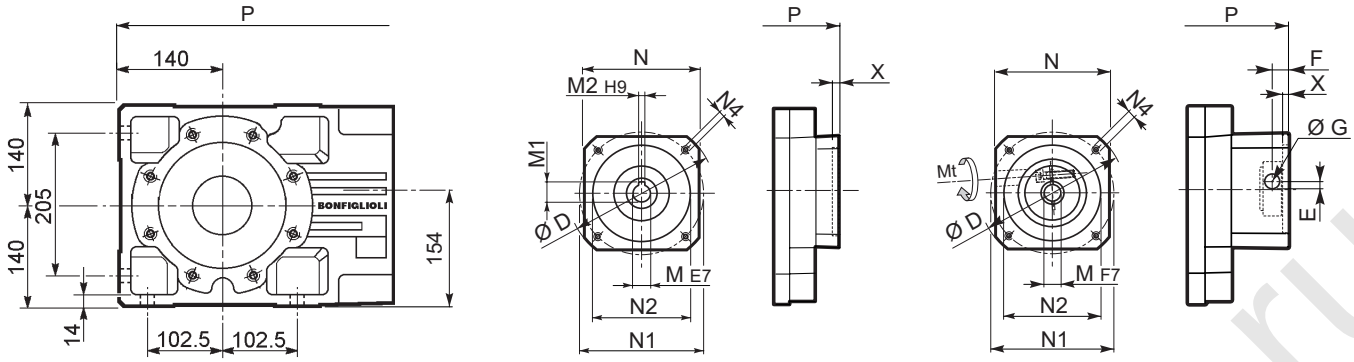

SK...

SC...

		D	M	M1	M2	N	N1	N2	N4	X	P 2/3x	P 4x	Kg
A50 4	**SK60A**	102	11	12.8	4	82	75	60	M5x10	3.5	—	497.5	62
A50 4	**SK60B**	102	14	16.3	5	82	75	60	M5x10	4	—	504.5	62
A50 4	**SK80A**	115	14	16.3	5	90	100	80	M6x12	4	—	504.5	62
A50 2/3	**SK80B**	120	14	16.3	5	96	100	80	M6x12	4	474	—	61/61
A50 2/3/4	**SK80C**	120	19	21.8	6	96	100	80	M6x12	4	474	545.5	61/61/63
A50 2/3/4	**SK95A**	130	14	16.3	5	102	115	95	M8x12	4	474	545.5	61/61/63
A50 2/3/4	**SK95B**	130	19	21.8	6	102	115	95	M8x12	4	474	545.5	61/61/63
A50 2/3/4	**SK95C**	130	24	27.3	8	102	115	95	M8x12	4	474	545.5	61/61/63
A50 2/3/4	**SK110A**	150	19	21.8	6	120	130	110	M8x12	5	474	545.5	61/61/65
A50 2/3/4	**SK110B**	150	24	27.3	8	120	130	110	M8x12	5	474	575	61/61/65
A50 2/3/4	**SK130A**	188	24	27.3	8	142	165	130	M10x20	5	474	575	63/63/66
A50 2/3	**SK130B**	189	32	35.3	10	160	165	130	M10x20	5	520.5	—	69/69
A50 2/3	**SK180A**	240	32	35.3	10	192	215	180	M12x19	5	520.5	—	69/69
A50 2/3	**SK180B**	240	38	41.3	10	192	215	180	M12x19	5	520.5	—	69/69

		Mt	D	E	F	G	M	N	N1	N2	N4	X	P 2/3x	P 4x	Kg
A50 4	**SC60A**	M6 15 Nm	102	7	12.5	12.5	11	82	75	60	M5x10	4	—	524.5	63
A50 4	**SC60B**	M6 15 Nm	102	7	12.5	12.5	14	82	75	60	M5x10	4	—	524.5	63
A50 4	**SC80A**	M6 15 Nm	115	6	12.5	12.5	14	90	100	80	M6x12	4	—	524.5	63
A50 2/3	**SC80B**	M6 15 Nm	120	15.5	14.5	17.75	14	96	100	80	M6x12	4	497.5	—	62/62
A50 2/3/4	**SC80C**	M6 15 Nm	120	15.5	14.5	17.75	19	96	100	80	M6x12	4	497.5	569	62/62/64
A50 2/3/4	**SC95A**	M6 15 Nm	130	16.5	15	17.75	14	102	115	95	M8x16	4	497.5	569	62/62/64
A50 2/3/4	**SC95B**	M6 15 Nm	130	16.5	15	17.75	19	102	115	95	M8x16	4	497.5	569	62/62/64
A50 2/3/4	**SC95C**	M6 15 Nm	130	16.5	15	17.75	24	102	115	95	M8x16	4	497.5	569	62/62/64
A50 2/3/4	**SC110A**	M6 15 Nm	150	16.5	16	17.75	19	120	130	110	M8x16	5	497.5	569	63/63/66
A50 2/3/4	**SC110B**	M6 15 Nm	150	16.5	16	17.75	24	120	130	110	M8x16	5	497.5	569	63/63/66
A50 2/3/4	**SC130A**	M6 15 Nm	188	19	16	17.75	24	142	165	130	M10x20	5	497.5	569	64/64/67
A50 2/3	**SC130B**	M8 36 Nm	189	20	17	17.75	32	160	165	130	M10x20	5	543.5	—	68/68
A50 2/3	**SC180A**	M8 36 Nm	240	20	17.5	17.75	32	192	215	180	M12x24	5	547.5	—	68/68
A50 2/3	**SC180B**	M8 36 Nm	240	20	17.5	17.75	38	192	215	180	M12x24	5	547.5	—	68/68

A 50...F...

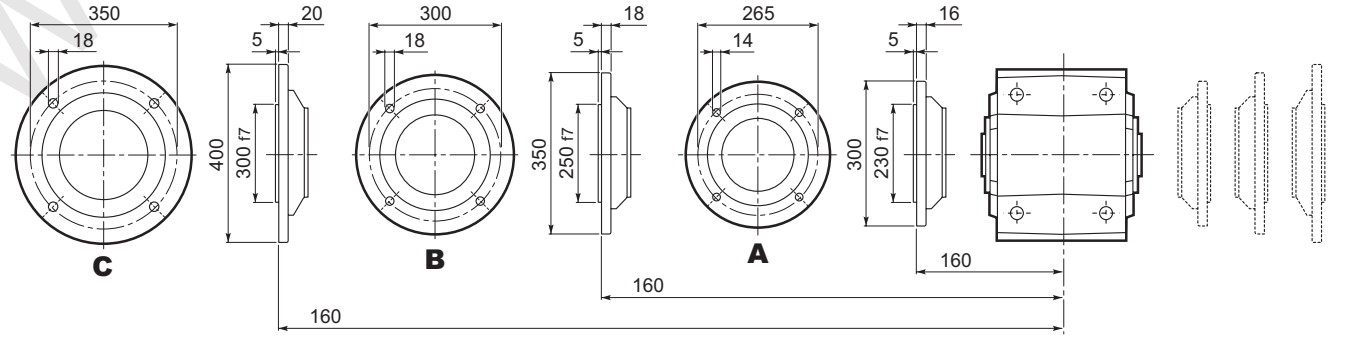

www.redukTor-inex.ru

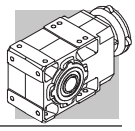

A 50...UR

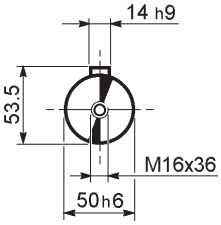

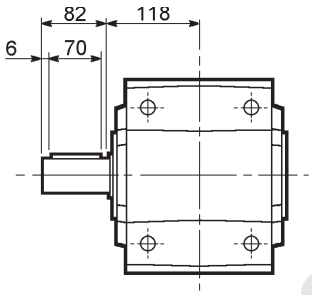

A 50...UD

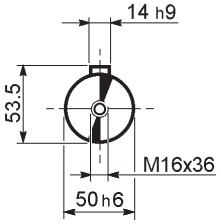

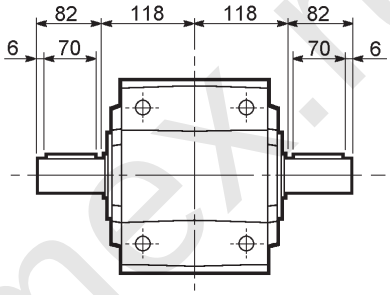

A 50...UH

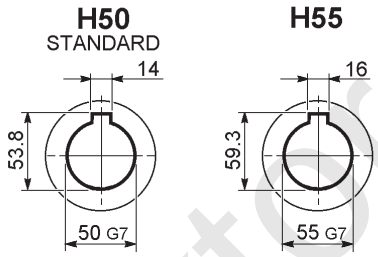

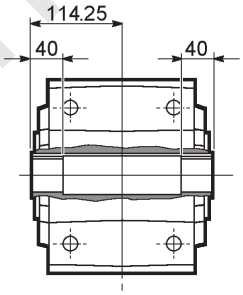

A 50...US

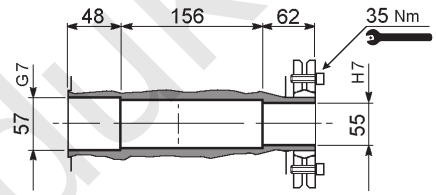

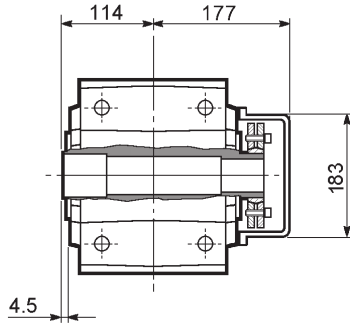

A 50...QF

	Ø
QF45	45
QF50	50
QF55	55

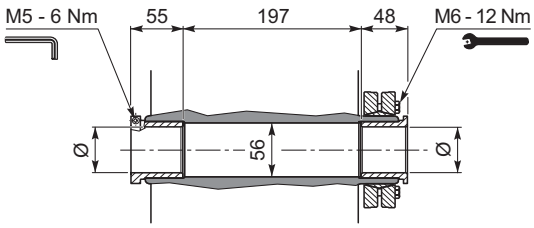

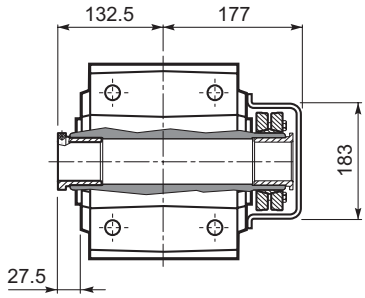

A 50...UV

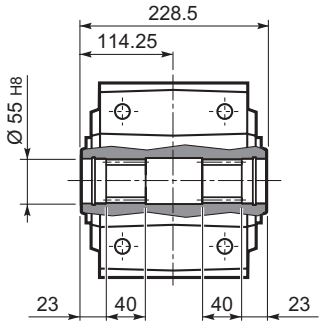

www.redukto-mex.ru

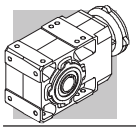

A 55...M

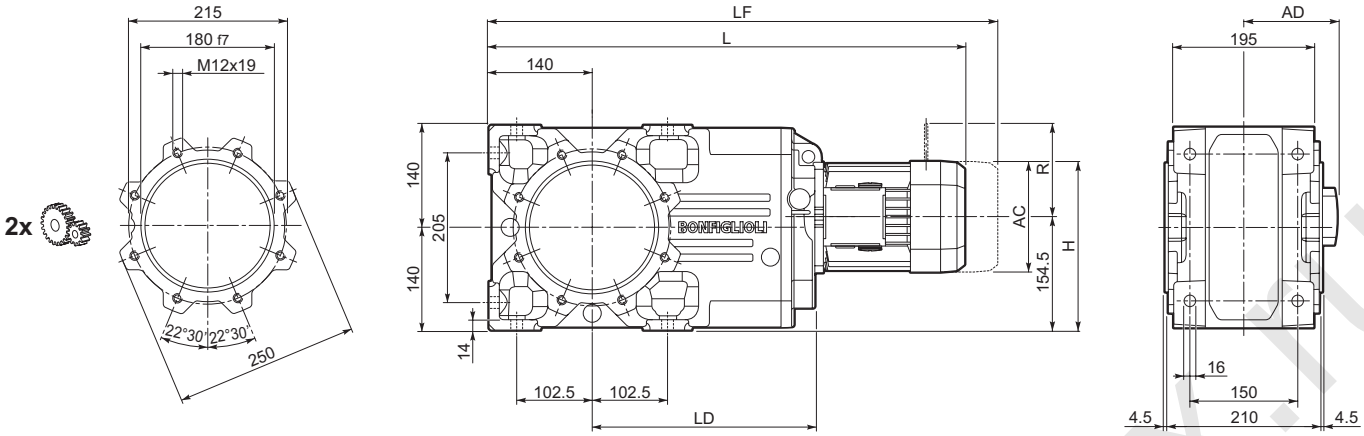

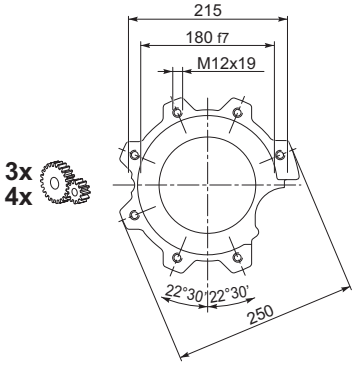

									M_FD M_FA		M_FD		M_FA	
			AC	H	L	LD	AD	Kg	LF	Kg	R	AD	R	AD
A 55 3	**S1**	**M1S**	138	198.5	603.5	—	108	80	666.5	82	103	132	124	108
A 55 3	**S1**	**M1L**	138	198.5	627.5	—	108	81	688.5	84	103	132	124	108
A 55 2/3	**S2**	**M2S**	156	232	656.5	302.5	119	88	726.5	92	129	143	134	119
A 55 2/3	**S3**	**M3S**	195	251	699.5	317.5	142	93	795.5	99	160	155	160	142
A 55 2/3	**S3**	**M3L**	195	251	731.5	317.5	142	101	822.5	108	160	155	160	142
A 55 2/3	**S4**	**M4**	258	283	839.5	302.5	193	135	948.5	153	226	193	217	193
A 55 2/3	**S4**	**M4LC**	258	283	874.5	302.5	193	143	973.5	161	226	193	217	193
A 55 2/3	**S5**	**M5S**	310	309.5	896.5	—	245	163	1036.5	193	266	245	247	245
A 55 2/3	**S5**	**M5L**	310	309.5	940.5	—	245	179	1080.5	209	266	245	247	245
A 55 4	**S1**	**M1S**	138	223	675	—	108	81	738	83	103	132	124	108
A 55 4	**S1**	**M1L**	138	223	699	—	108	82	760	85	103	132	124	108
A 55 4	**S2**	**M2S**	156	232	728	—	119	86	798	90	129	143	134	119
A 55 4	**S3**	**M3S**	195	251.5	771	—	142	91	867	98	160	155	160	142
A 55 4	**S3**	**M3L**	195	251.5	803	—	142	98	894	105	160	155	160	142

www.reduktor-mex.ru

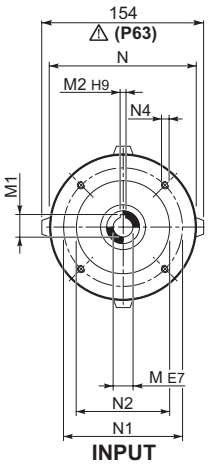

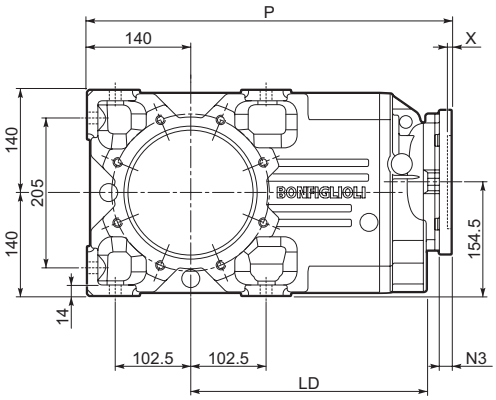

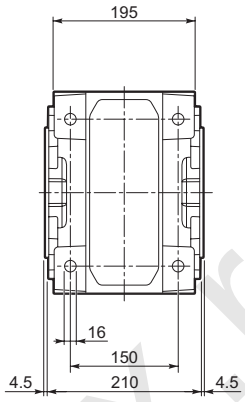

		LD	M	M1	M2	N	N1	N2	N3	N4	X	P	Kg
A 55 3	**P63**	302.5	11	12.8	4	140	115	95	—	M8x19	4	472.5	75
A 55 3	**P71**	302.5	14	16.3	5	160	130	110	—	M8x16	4.5	472.5	75
A 55 2/3	**P80**	317.5	19	21.8	6	200	165	130	—	M10x12	4	492	81
A 55 2/3	**P90**	317.5	24	27.3	8	200	165	130	—	M10x12	4	492	81
A 55 2/3	**P100**	302.5	28	31.3	8	250	215	180	—	M12x16	4.5	502	85
A 55 2/3	**P112**	302.5	28	31.3	8	250	215	180	—	M12x16	4.5	502	85
A 55 2/3	**P132**	302.5	38	41.3	10	300	265	230	16	14	5	538.5	93
A 55 2/3	**P160**	—	42	45.3	12	350	300	250	23	18	5.5	589	110
A 55 2/3	**P180**	—	48	51.8	14	350	300	250	23	18	5.5	589	110
A 55 4	**P63**	—	11	12.8	4	140	115	95	—	M8x19	4	544	77
A 55 4	**P71**	—	14	16.3	5	160	130	110	—	M8x16	4.5	544	77
A 55 4	**P80**	—	19	21.8	6	200	165	130	—	M10x12	4	563.5	78
A 55 4	**P90**	—	24	27.3	8	200	165	130	—	M10x12	4	563.5	78
A 55 4	**P100**	—	28	31.3	8	250	215	180	—	M12x16	4.5	573.5	82
A 55 4	**P112**	—	28	31.3	8	250	215	180	—	M12x16	4.5	573.5	82

A 55...HS

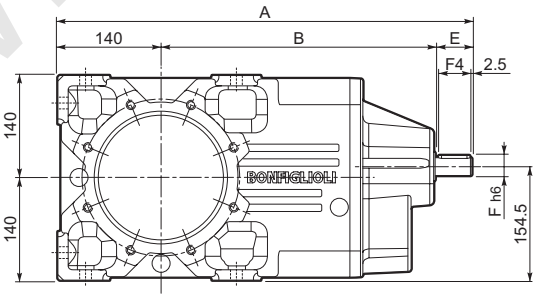

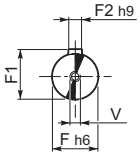

		A	B	E	F	F1	F2	F3	F4	V	Kg
A 55 2		561.5	371.5	50	24	27	8	2.5	45	M8x19	96
A 55 3	**HS**	561.5	371.5	50	24	27	8	2.5	45	M8x19	91
A 55 4		594	414	40	19	21.5	6	2.5	35	M6x16	92

www.redukt or-mex.ru

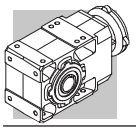

A 55...SK / SC

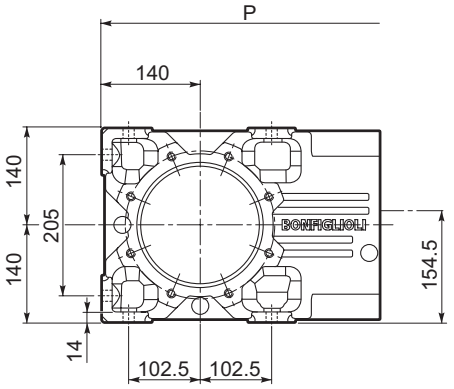

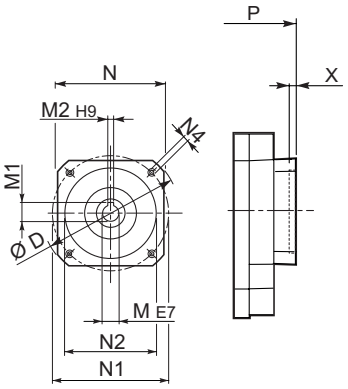

SK...

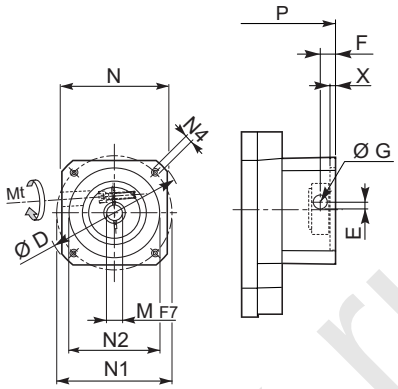

SC...

		D	M	M1	M2	N	N1	N2	N4	X	P 2/3x	P 4x	Kg
A55 4	**SK60A**	102	11	12.8	4	82	75	60	M5x10	3.5	—	515.5	76
A55 4	**SK60B**	102	14	16.3	5	82	75	60	M5x10	4	—	522.5	76
A55 4	**SK80A**	115	14	16.3	5	90	100	80	M6x12	4	—	522.5	76
A55 3	**SK80B**	120	14	16.3	5	96	100	80	M6x12	4	492	—	81
A55 2/3/4	**SK80C**	120	19	21.8	6	96	100	80	M6x12	4	492	563.5	81/81/77
A55 2/3/4	**SK95A**	130	14	16.3	5	102	115	95	M8x12	4	492	563.5	81/81/77
A55 2/3/4	**SK95B**	130	19	21.8	6	102	115	95	M8x12	4	492	563.5	81/81/77
A55 2/3/4	**SK95C**	130	24	27.3	8	102	115	95	M8x12	4	492	563.5	81/81/77
A55 2/3/4	**SK110A**	150	19	21.8	6	120	130	110	M8x12	5	492	593	81/81/78
A55 2/3/4	**SK110B**	150	24	27.3	8	120	130	110	M8x12	5	492	593	81/81/78
A55 2/3/4	**SK130A**	188	24	27.3	8	142	165	130	M10x20	5	492	593	83/83/79
A55 2/3	**SK130B**	189	32	35.3	10	160	165	130	M10x20	5	538.5	—	90/90
A55 2/3	**SK180A**	240	32	35.3	10	192	215	180	M12x19	5	538.5	—	90/90
A55 2/3	**SK180B**	240	38	41.3	10	192	215	180	M12x19	5	538.5	—	90/90

		Mt		D	E	F	G	M	N	N1	N2	N4	X	P 2/3x	P 4x	Kg
A55 4	**SC60A**	M6	15 Nm	102	7	12.5	12.5	11	82	75	60	M5x10	4	—	542.5	77
A55 4	**SC60B**	M6	15 Nm	102	7	12.5	12.5	14	82	75	60	M5x10	4	—	542.5	77
A55 4	**SC80A**	M6	15 Nm	115	6	12.5	12.5	14	90	100	80	M6x12	4	—	542.5	77
A55 3	**SC80B**	M6	15 Nm	120	15.5	14.5	17.75	14	96	100	80	M6x12	4	515.5	—	82
A55 2/3/4	**SC80C**	M6	15 Nm	120	15.5	14.5	17.75	19	96	100	80	M6x12	4	515.5	587	82/82/78
A55 2/3/4	**SC95A**	M6	15 Nm	130	16.5	15	17.75	14	102	115	95	M8x16	4	515.5	587	82/82/78
A55 2/3/4	**SC95B**	M6	15 Nm	130	16.5	15	17.75	19	102	115	95	M8x16	4	515.5	587	82/82/78
A55 2/3/4	**SC95C**	M6	15 Nm	130	16.5	15	17.75	24	102	115	95	M8x16	4	515.5	587	82/82/78
A55 2/3/4	**SC110A**	M6	15 Nm	150	16.5	16	17.75	19	120	130	110	M8x16	5	515.5	587	83/83/79
A55 2/3/4	**SC110B**	M6	15 Nm	150	16.5	16	17.75	24	120	130	110	M8x16	5	515.5	587	83/83/79
A55 2/3/4	**SC130A**	M6	15 Nm	188	19	16	17.75	24	142	165	130	M10x20	5	515.5	587	84/84/80
A55 2/3	**SC130B**	M8	36 Nm	189	20	17	17.75	32	160	165	130	M10x20	5	561.5	—	93/93
A55 2/3	**SC180A**	M8	36 Nm	240	20	17.5	17.75	32	192	215	180	M12x24	5	565.5	—	93/93
A55 2/3	**SC180B**	M8	36 Nm	240	20	17.5	17.75	38	192	215	180	M12x24	5	565.5	—	93/93

A 55...F...

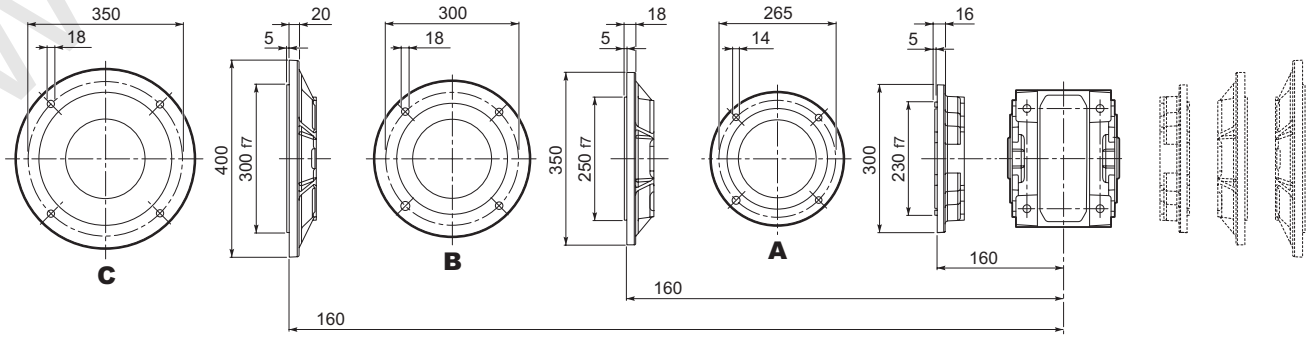

www.redukTor-inex.ru

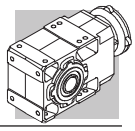

A 55...UR

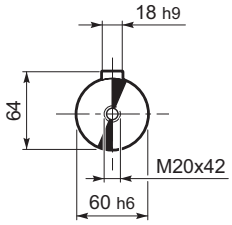

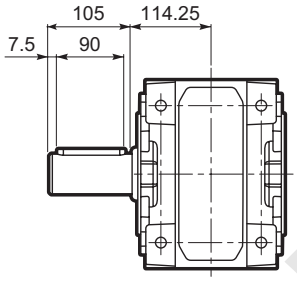

A 55...UD

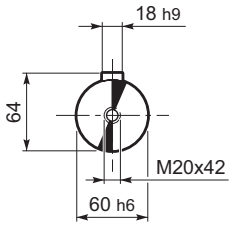

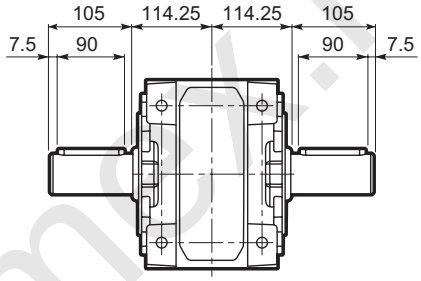

A 55...UH

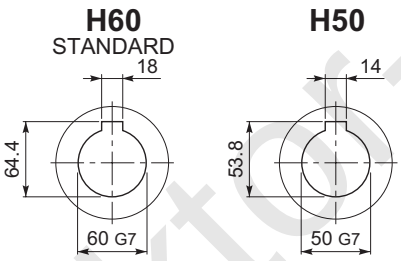

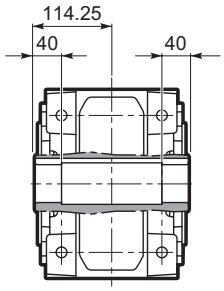

A 55...US

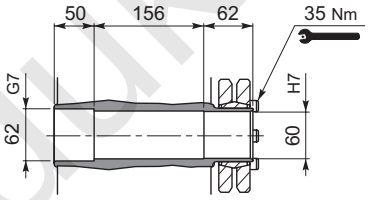

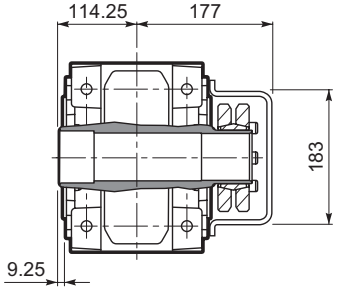

A 55...QF

	Ø
QF45	45
QF50	50
QF55	55
QF60	60

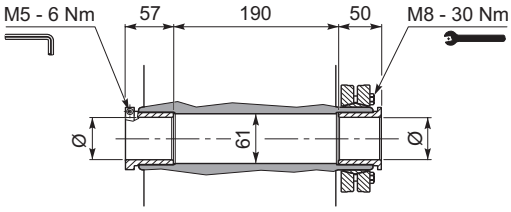

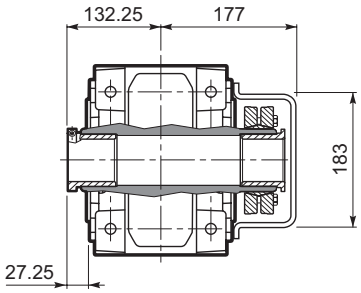

A 55...UV

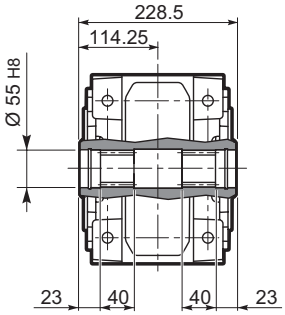

www.redukto-mex.ru

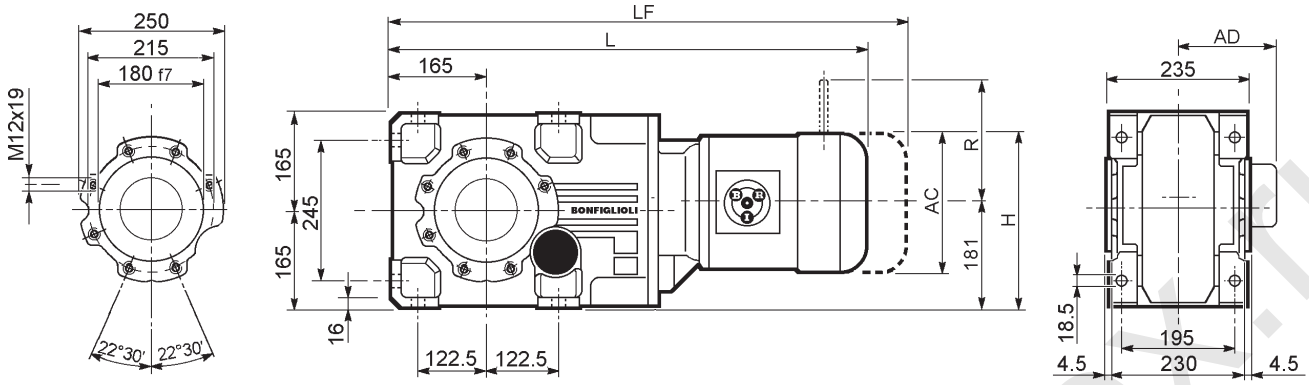

								M_FD M_FA		M_FD		M_FA	
			AC	H	L	AD	Kg	LF	Kg	R	AD	R	AD
A 60 2/3	**S2**	**M2S**	156	256.5	700.5	119	98	770.5	102	129	143	134	119
A 60 2/3	**S3**	**M3S**	195	276	743.5	142	103	839.5	111	160	155	160	142
A 60 2/3	**S3**	**M3L**	195	276	775.5	142	111	866.5	118	160	155	160	142
A 60 2/3	**S4**	**M4**	258	307.5	883.5	193	145	992.5	163	226	193	217	193
A 60 2/3	**S4**	**M4LC**	258	307.5	917.5	193	153	1016.5	171	226	193	217	193
A 60 2/3	**S5**	**M5S**	310	333.5	970	245	173	1110	203	266	245	247	245
A 60 2/3	**S5**	**M5L**	310	333.5	1014	245	189	1154	219	266	245	247	245
A 60 4	**S1**	**M1S**	138	247.5	718	108	99	781	101	103	132	124	108
A 60 4	**S1**	**M1L**	138	247.5	742	108	100	803	103	103	132	124	108
A 60 4	**S2**	**M2S**	156	256.5	771	119	104	841	108	129	143	134	119
A 60 4	**S3**	**M3S**	195	276	814	142	109	910	117	160	155	160	142
A 60 4	**S3**	**M3L**	195	276	846	142	117	937	124	160	155	160	142

www.reduktor-mex.ru

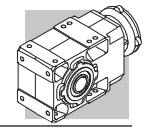

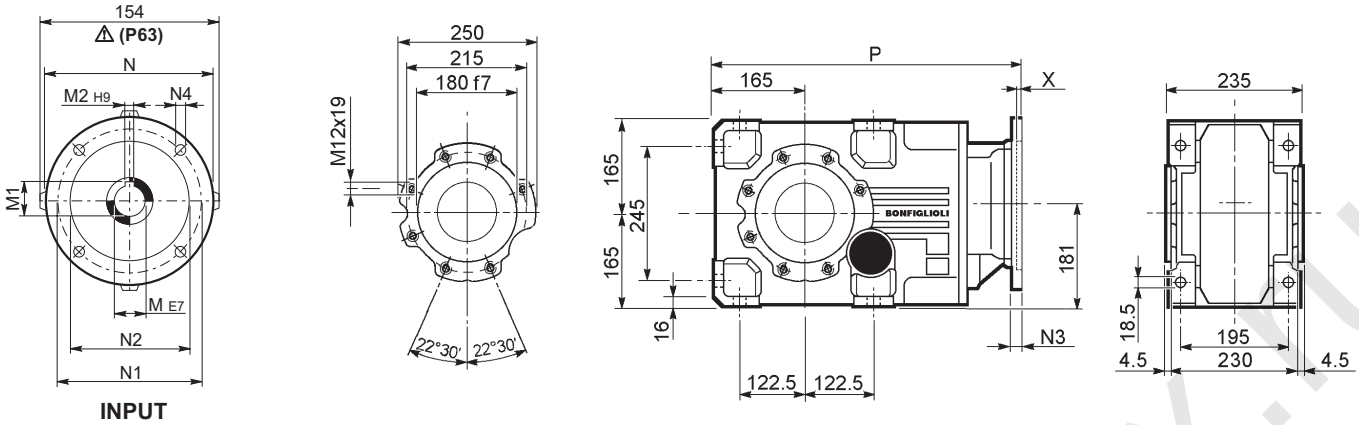

		M	M1	M2	N	N1	N2	N3	N4	X	P	Kg
A 60 3	**P63**	11	12.8	4	140	115	95	—	M8x19	4	516.5	90
A 60 3	**P71**	14	16.3	5	160	130	110	—	M8x16	4.5	516.5	90
A 60 2/3	**P80**	19	21.8	6	200	165	130	—	M10x12	4	536	91
A 60 2/3	**P90**	24	27.3	8	200	165	130	—	M10x12	4	536	91
A 60 2/3	**P100**	28	31.3	8	250	215	180	—	M12x16	4.5	546	95
A 60 2/3	**P112**	28	31.3	8	250	215	180	—	M12x16	4.5	546	95
A 60 2/3	**P132**	38	41.3	10	300	265	230	16	14	5	581.5	104
A 60 2/3	**P160**	42	45.3	12	350	300	250	23	18	5.5	633	121
A 60 2/3	**P180**	48	51.8	14	350	300	250	23	18	5.5	633	121
A 60 4	**P63**	11	12.8	4	140	115	95	—	M8x19	4	587	88
A 60 4	**P71**	14	16.3	5	160	130	110	—	M8x16	4.5	587	88
A 60 4	**P80**	19	21.8	6	200	165	130	—	M10x12	4	606.5	90
A 60 4	**P90**	24	27.3	8	200	165	130	—	M10x12	4	606.5	90
A 60 4	**P100**	28	31.3	8	250	215	180	—	M12x16	4.5	616.5	94
A 60 4	**P112**	28	31.3	8	250	215	180	—	M12x16	4.5	616.5	94

A 60...HS

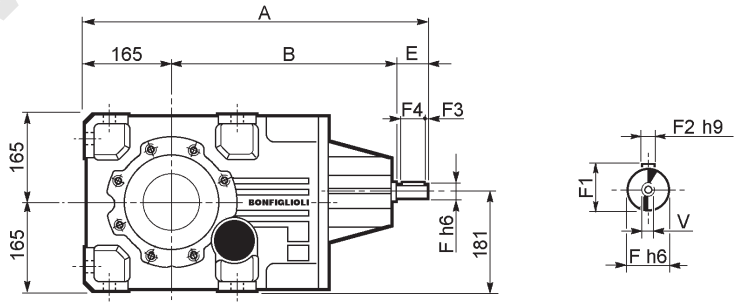

		A	B	E	F	F1	F2	F3	F4	V	Kg
A 60 2		633	408	60	28	31	8	5.0	50	M10x22	106
A 60 3	**HS**	633	408	60	28	31	8	5.0	50	M10x22	106
A 60 4		676	461	50	24	27	8	2.5	45	M8x19	112

www.redukt or-mex.ru

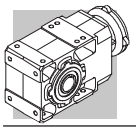

A 60...SK / SC

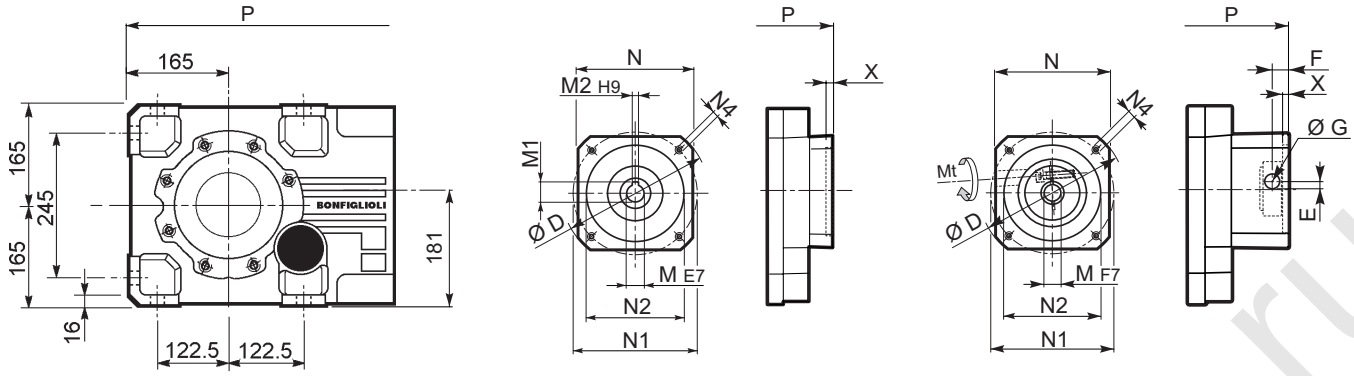

SK...

SC...

		D	M	M1	M2	N	N1	N2	N4	X	P 2/3x	P 4x	Kg
A60 4	**SK80B**	120	14	16.3	5	96	100	80	M6x12	4	—	606.5	89
A60 2/3/4	**SK80C**	120	19	21.8	6	96	100	80	M6x12	4	536	606.5	93/93/92
A60 2/3/4	**SK95A**	130	14	16.3	5	102	115	95	M8x12	4	536	606.5	93/93/92
A60 2/3/4	**SK95B**	130	19	21.8	6	102	115	95	M8x12	4	536	606.5	93/93/92
A60 2/3/4	**SK95C**	130	24	27.3	8	102	115	95	M8x12	4	536	606.5	93/93/92
A60 2/3/4	**SK110A**	140	19	21.8	6	120	130	110	M8x12	5	536	606.5	93/93/92
A60 2/3/4	**SK110B**	140	24	27.3	8	120	130	110	M8x12	5	536	606.5	93/93/92
A60 2/3/4	**SK130A**	188	24	27.3	8	142	165	130	M10x20	5	536	606.5	97/97/103
A60 2/3	**SK130B**	189	32	35.3	10	160	165	130	M10x20	5	582.5	—	102/102
A60 2/3	**SK180A**	240	32	35.3	10	192	215	180	M12x19	5	582.5	—	102/102
A60 2/3	**SK180B**	240	38	41.3	10	192	215	180	M12x19	5	582.5	—	102/102

		Mt	D	E	F	G	M	N	N1	N2	N4	X	P 2/3x	P 4x	Kg
A60 4	**SC80B**	M6 15 Nm	120	15.5	14.5	17.75	14	96	100	80	M6x12	4	—	630	90
A60 2/3/4	**SC80C**	M6 15 Nm	120	15.5	14.5	17.75	19	96	100	80	M6x12	4	559.5	630	94/94/93
A60 2/3/4	**SC95A**	M6 15 Nm	130	16.5	15	17.75	14	102	115	95	M8x16	4	559.5	630	94/94/93
A60 2/3/4	**SC95B**	M6 15 Nm	130	16.5	15	17.75	19	102	115	95	M8x16	4	559.5	630	94/94/93
A60 2/3/4	**SC95C**	M6 15 Nm	130	16.5	15	17.75	24	102	115	95	M8x16	4	559.5	630	94/94/93
A60 2/3/4	**SC110A**	M6 15 Nm	140	16.5	16	17.75	19	120	130	110	M8x16	5	559.5	630	95/95/93
A60 2/3/4	**SC110B**	M6 15 Nm	140	16.5	16	17.75	24	120	130	110	M8x16	5	559.5	630	95/95/93
A60 2/3/4	**SC130A**	M6 15 Nm	188	19	16	17.75	24	142	165	130	M10x20	5	559.5	630	96/96/104
A60 2/3	**SC130B**	M8 36 Nm	189	20	17	17.75	32	160	165	130	M10x20	5	605.5	—	105/105
A60 2/3	**SC180A**	M8 36 Nm	240	20	17.5	17.75	32	192	215	180	M12x24	5	609.5	—	105/105
A60 2/3	**SC180B**	M8 36 Nm	240	20	17.5	17.75	38	192	215	180	M12x24	5	609.5	—	105/105

A 60...F...

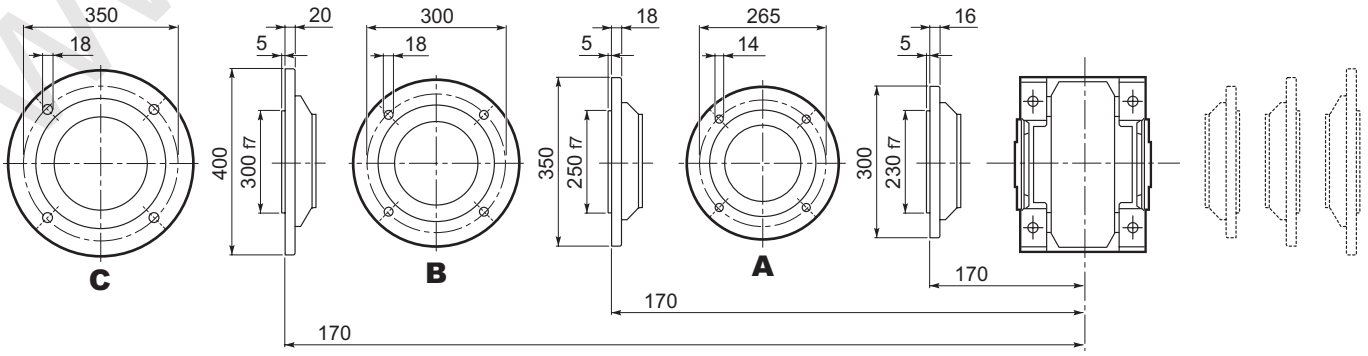

BONFIGLIOLI RIDUTTORI

www.redukto r.mex.ru

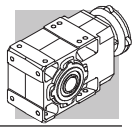

A 60...UR

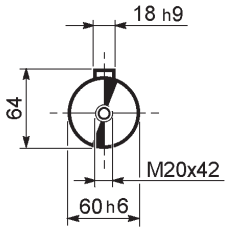

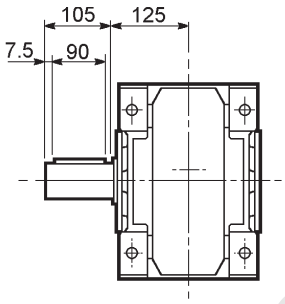

A 60...UD

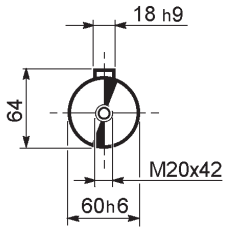

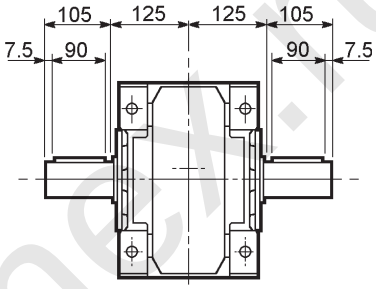

A 60...UH

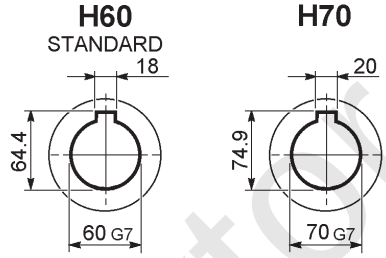

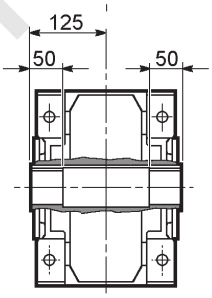

A 60...US

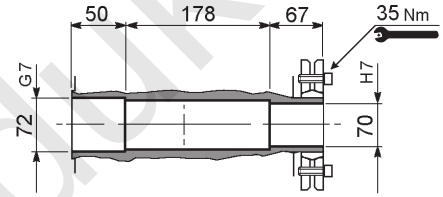

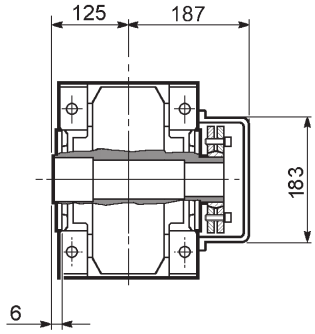

A 60...QF

	Ø
QF55	55
QF60	60
QF65	65
QF70	70

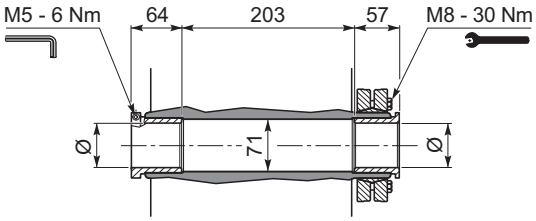

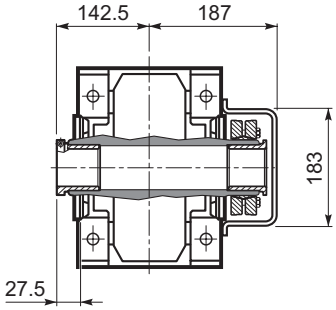

A 60...UV

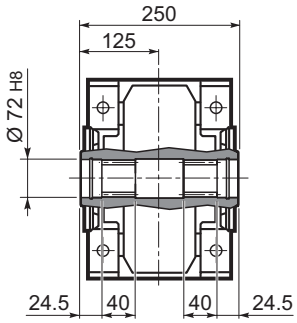

www.redukto-mex.ru

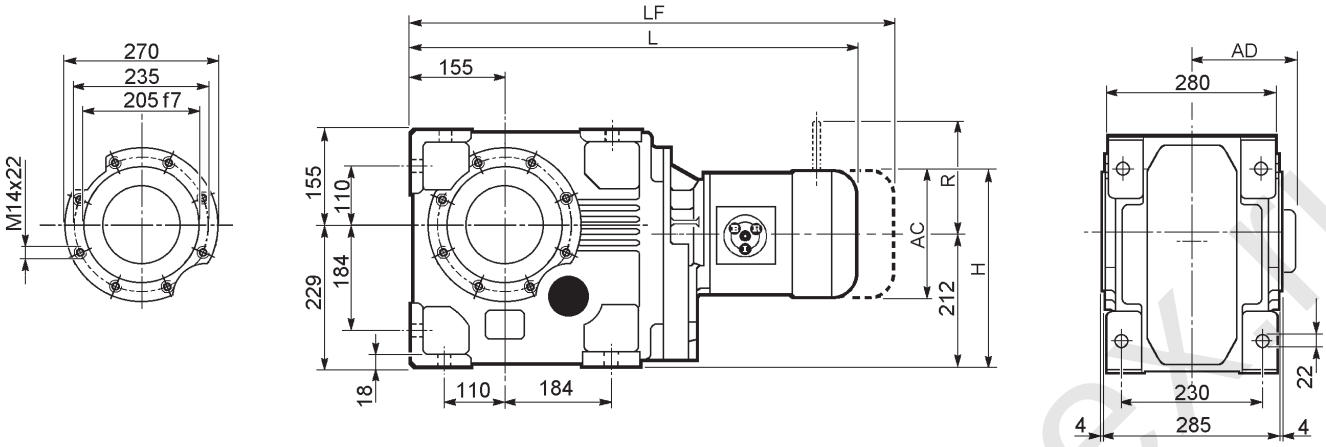

			AC	H	L	AD	Kg	M_FD M_FA LF	Kg	M_FD R	M_FD AD	M_FA R	M_FA AD
A 70 3	**S2**	**M2S**	156	290	688.5	119	152	758.5	156	129	143	134	119
A 70 3	**S3**	**M3S**	195	309.5	731.5	142	157	827.5	164	160	155	160	142
A 70 3	**S3**	**M3L**	195	309.5	763.5	142	164	854.5	171	160	155	160	142
A 70 3	**S4**	**M4**	258	341	872.5	193	198	981.5	216	226	193	217	193
A 70 3	**S4**	**M4LC**	258	341	907.5	193	206	1006.5	224	226	193	217	193
A 70 3	**S5**	**M5S**	310	367	958	245	226	1098	256	266	245	247	245
A 70 3	**S5**	**M5L**	310	367	1002	245	242	1142	272	266	245	247	245
A 70 4	**S1**	**M1S**	138	281	686.5	108	151	749.5	154	103	132	124	108
A 70 4	**S1**	**M1L**	138	281	710.5	108	152	771.5	155	103	132	124	108
A 70 4	**S2**	**M2S**	156	290	739.5	119	156	809.5	160	129	143	134	119
A 70 4	**S3**	**M3S**	195	309.5	782.5	142	161	878.5	168	160	155	160	142
A 70 4	**S3**	**M3L**	195	309.5	814.5	142	168	905.5	175	160	155	160	142
A 70 4	**S4**	**M4**	258	341	922.5	193	202	1031.5	220	226	193	217	193

www.reduktor-mex.ru

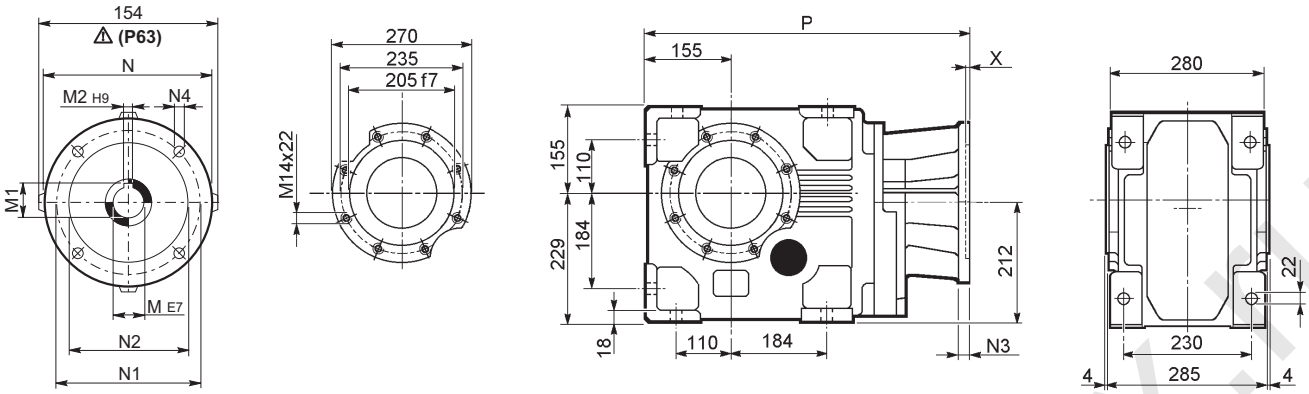

INPUT

		M	M1	M2	N	N1	N2	N3	N4	X	P	Kg
A 70 3	**P80**	19	21.8	6	200	165	130	—	M10x12	4	524	144
A 70 3	**P90**	24	27.3	8	200	165	130	—	M10x12	4	524	144
A 70 3	**P100**	28	31.3	8	250	215	180	—	M12x16	4.5	534	146
A 70 3	**P112**	28	31.3	8	250	215	180	—	M12x16	4.5	534	146
A 70 3	**P132**	38	41.3	10	300	265	230	16	14	5	570.5	154
A 70 3	**P160**	42	45.3	12	350	300	250	23	18	6	626	169
A 70 3	**P180**	48	51.8	14	350	300	250	23	18	6	626	169
A 70 3	**P200**	55	59.3	16	400	350	300	—	M16x25	7	651	179
A 70 4	**P63**	11	12.8	4	140	115	95	—	M8x19	4	555.5	146
A 70 4	**P71**	14	16.3	5	160	130	110	—	M8x16	4.5	555.5	146
A 70 4	**P80**	19	21.8	6	200	165	130	—	M10x12	4	575	147
A 70 4	**P90**	24	27.3	8	200	165	130	—	M10x12	4	575	147
A 70 4	**P100**	28	31.3	8	250	215	180	—	M12x16	4.5	585	148
A 70 4	**P112**	28	31.3	8	250	215	180	—	M12x16	4.5	585	148
A 70 4	**P132**	38	41.3	10	300	265	230	16	14	5	618.5	157

A 70...HS

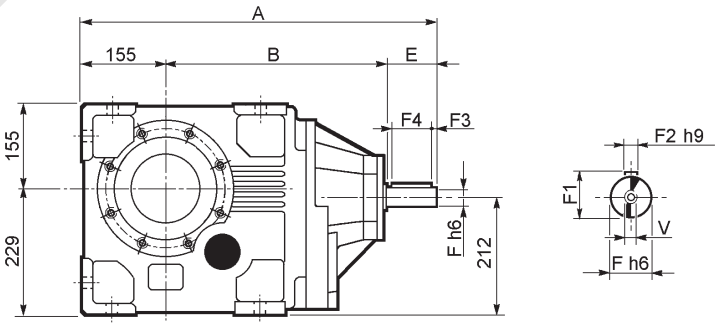

		A	B	E	F	F1	F2	F3	F4	V	Kg
A 70 3	**HS**	708.5	443.5	110	42	45	12	10	90	M12x28	165
A 70 4		644.5	439.5	50	24	27	8	2.5	45	M8x19	149

www.redukto-rnex.ru

A 70...UR

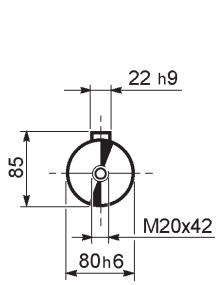

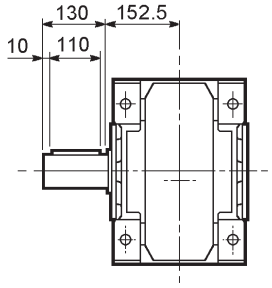

A 70...UD

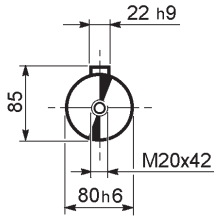

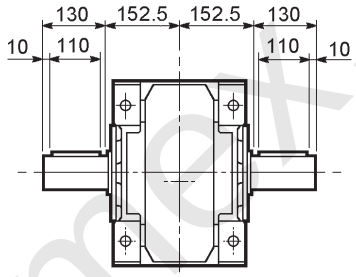

A 70...UH

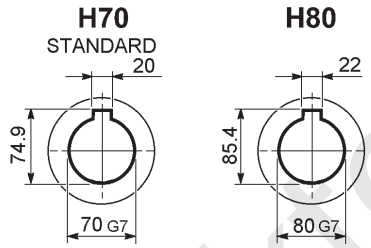

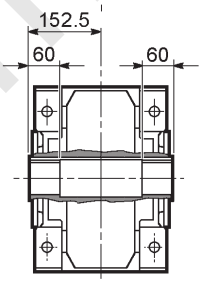

A 70...US

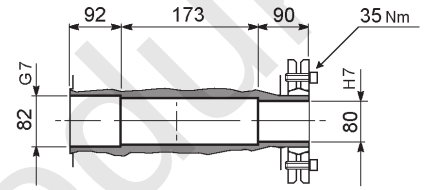

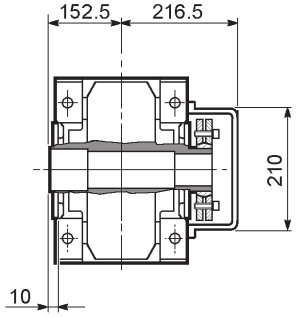

A 70...F...

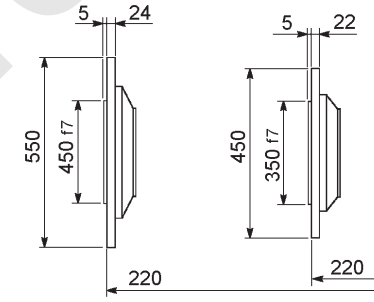

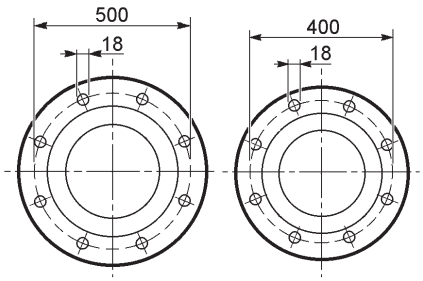

B A

www.reduktor-mex.ru

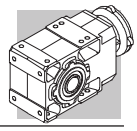

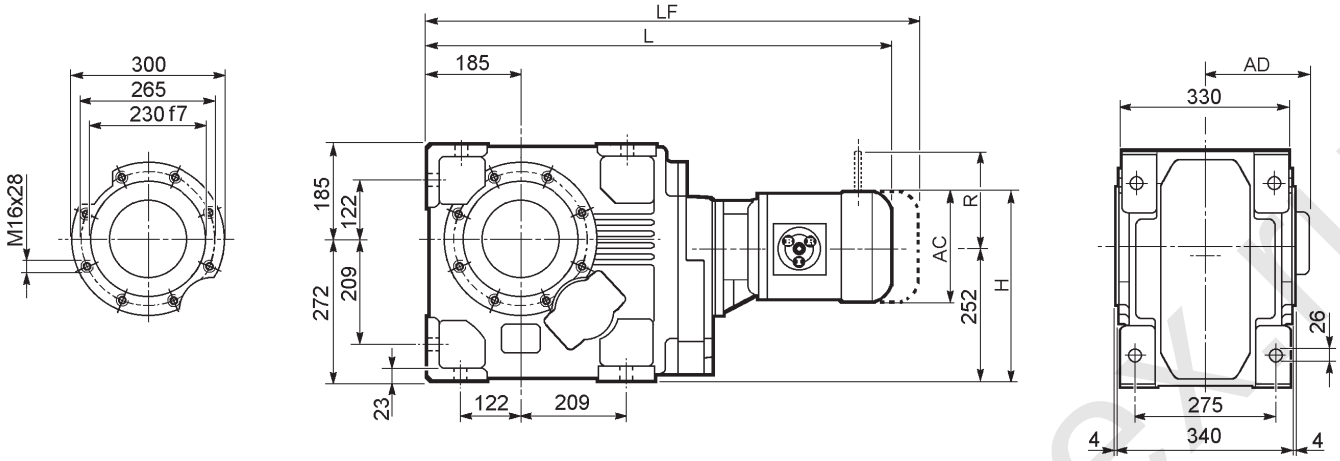

								M_FD M_FA		M_FD		M_FA	
			AC	H	L	AD	Kg	LF	Kg	R	AD	R	AD
A 80 3	**S3**	**M3S**	195	349.5	809.5	142	256	905.5	264	160	155	160	142
A 80 3	**S3**	**M3L**	195	349.5	841.5	142	264	932.5	271	160	155	160	142
A 80 3	**S4**	**M4**	258	381	949.5	193	298	1058.5	316	226	193	217	193
A 80 3	**S4**	**M4LC**	258	381	984.5	193	306	1083.5	324	226	193	217	193
A 80 3	**S5**	**M5S**	310	407	1036	245	326	1176	356	266	245	247	245
A 80 3	**S5**	**M5L**	310	407	1080	245	342	1220	372	266	245	247	245
A 80 4	**S1**	**M1S**	138	321	776.5	108	245	839.5	247	103	132	124	108
A 80 4	**S1**	**M1L**	138	321	800.5	108	246	861.5	249	103	132	124	108
A 80 4	**S2**	**M2S**	156	330	829.5	119	250	899.5	254	129	143	134	119
A 80 4	**S3**	**M3S**	195	349.5	872.5	142	255	968.5	262	160	155	160	142
A 80 4	**S3**	**M3L**	195	349.5	904.5	142	262	995.5	269	160	155	160	142
A 80 4	**S4**	**M4**	258	381	1012.5	193	296	1121.5	314	226	193	217	193

www.reduktor-mex.ru

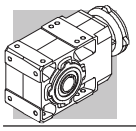

A 80...P(IEC)

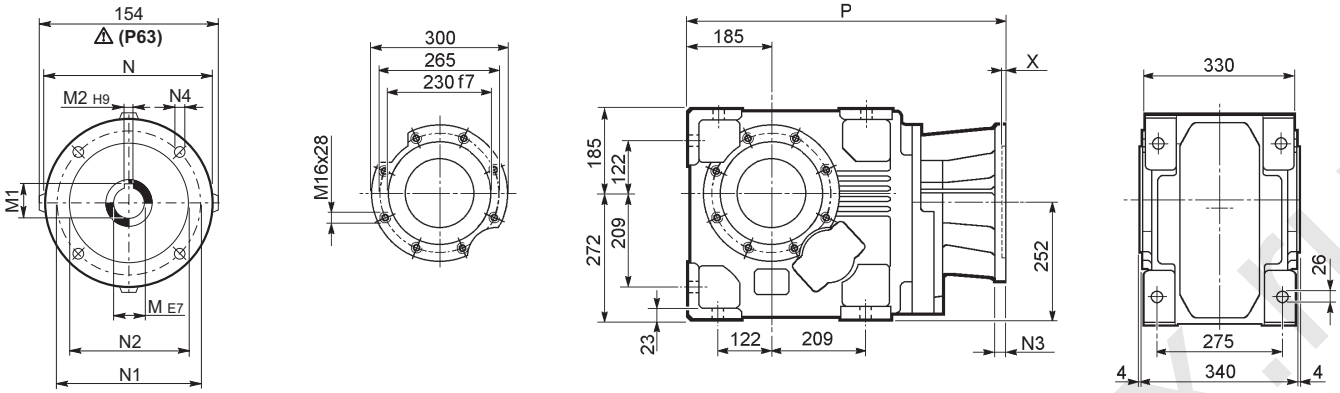

INPUT

		M	M1	M2	N	N1	N2	N3	N4	X	P	Kg
A 80 3	**P80**	19	21.8	6	200	165	130	—	M10x12	4	602	243
A 80 3	**P90**	24	27.3	8	200	165	130	—	M10x12	4	602	243
A 80 3	**P100**	28	31.3	8	250	215	180	—	M12x16	4.5	612	245
A 80 3	**P112**	28	31.3	8	250	215	180	—	M12x16	4.5	612	245
A 80 3	**P132**	38	41.3	10	300	265	230	16	14	5	648.5	253
A 80 3	**P160**	42	45.3	12	350	300	250	23	18	6	704	268
A 80 3	**P180**	48	51.8	14	350	300	250	23	18	6	704	268
A 80 3	**P200**	55	59.3	16	400	350	300	—	M16x25	7	729	279
A 80 3	**P225**	60	64.4	18	450	400	350	25	18	6	774.5	298
A 80 4	**P63**	11	12.8	4	140	115	95	—	M8x19	4	645.5	248
A 80 4	**P71**	14	16.3	5	160	130	110	—	M8x16	4.5	645.5	248
A 80 4	**P80**	19	21.8	6	200	165	130	—	M10x12	4	665	249
A 80 4	**P90**	24	27.3	8	200	165	130	—	M10x12	4	665	249
A 80 4	**P100**	28	31.3	8	250	215	180	—	M12x16	4.5	675	250
A 80 4	**P112**	28	31.3	8	250	215	180	—	M12x16	4.5	675	250
A 80 4	**P132**	38	41.3	10	300	265	230	16	M12x16	5	711.5	259

A 80...HS

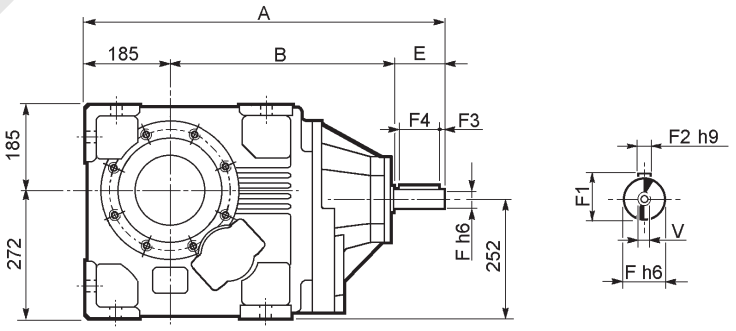

		A	B	E	F	F1	F2	F3	F4	V	Kg
A 80 3	**HS**	786.5	491.5	110	42	45	12	10	90	M12x28	265
A 80 4		735	499	50	24	27	8	2.5	45	M8x19	250

www.redukt0r-mex.ru

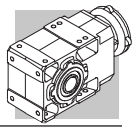

A 80...UR

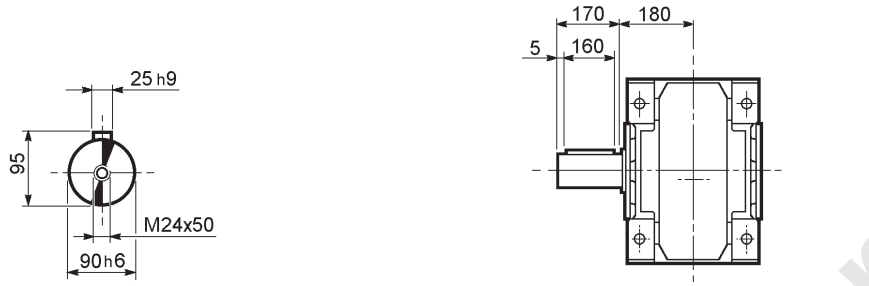

A 80...UD

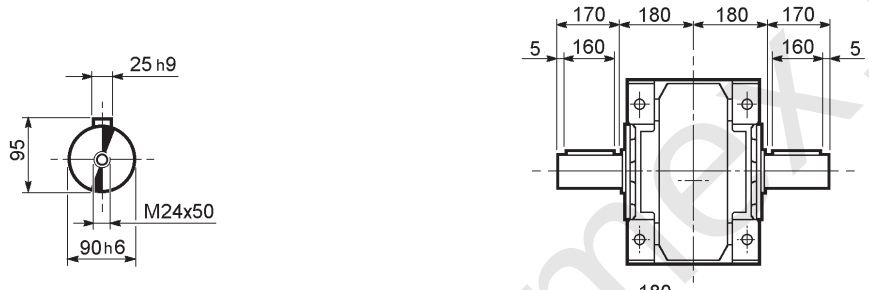

A 80...UH

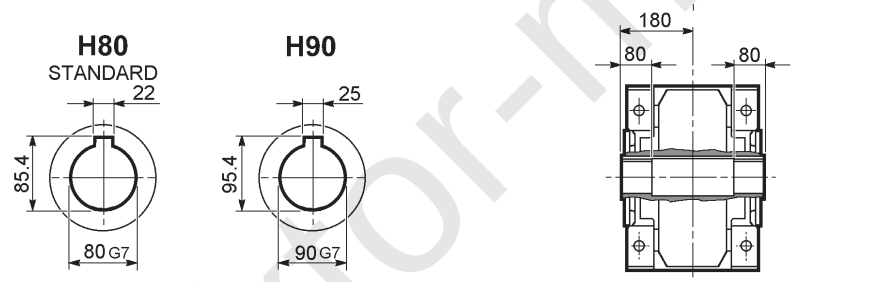

A 80...US

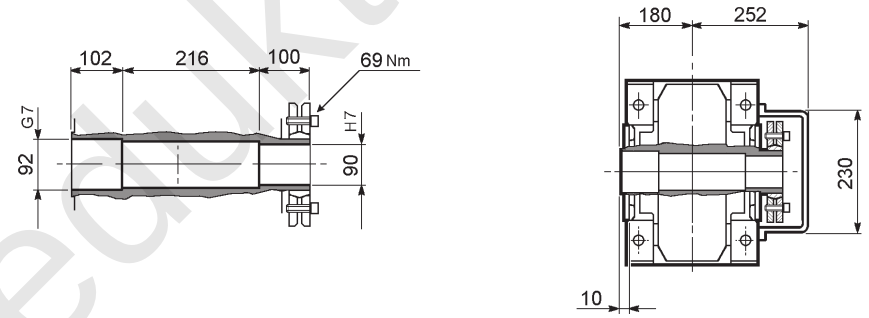

A 80...F...

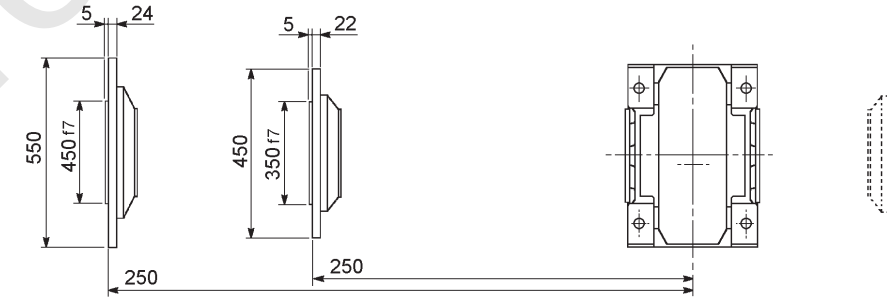

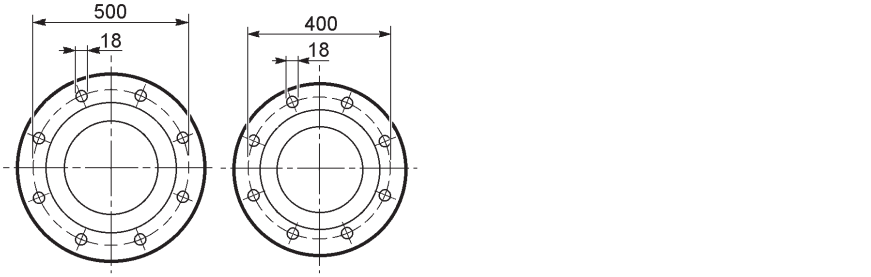

B A

www.reduktor-mex.ru

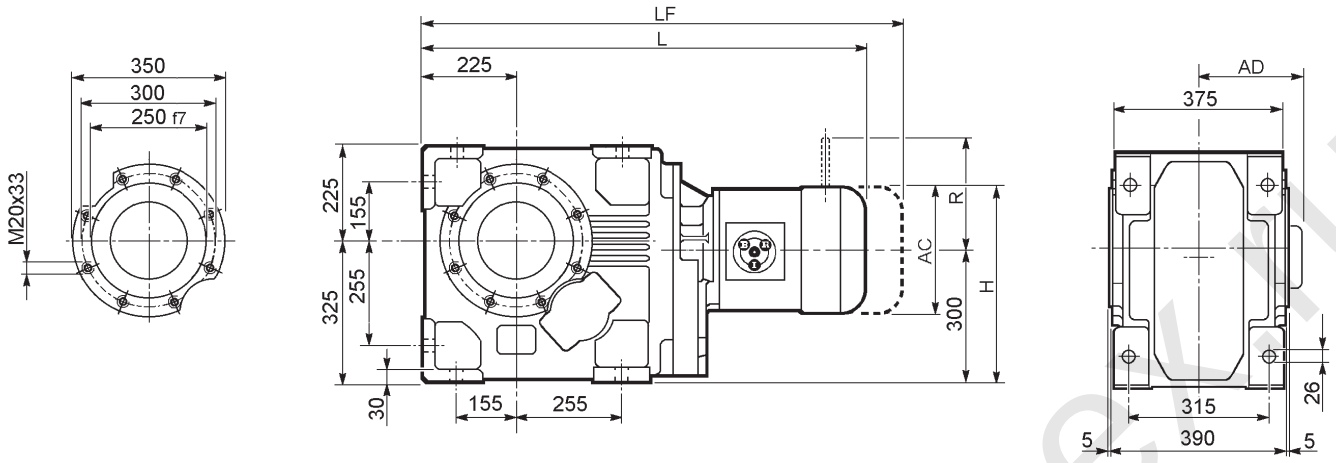

			AC	H	L	AD	Kg	M_FD M_FA LF	Kg	M_FD R	M_FD AD	M_FA R	M_FA AD
A 90 3	**S3**	**M3S**	195	397.5	930.5	142	413	1026.5	420	160	155	160	142
A 90 3	**S3**	**M3L**	195	397.5	962.5	142	420	1053.5	427	160	155	160	142
A 90 3	**S4**	**M4**	258	429	1070.5	193	454	1179.5	472	226	193	217	193
A 90 3	**S4**	**M4LC**	258	429	1105.5	193	462	1204.5	480	226	193	217	193
A 90 3	**S5**	**M5S**	310	455	1157	245	482	1297	512	266	245	247	245
A 90 3	**S5**	**M5L**	310	455	1201	245	498	1341	528	266	245	247	245
A 90 4	**S1**	**M1S**	138	369	917.5	108	411	980.5	247	103	132	124	108
A 90 4	**S1**	**M1L**	138	369	941.5	108	412	1002.5	249	103	132	124	108
A 90 4	**S2**	**M2S**	156	378	970.5	119	422	1040.5	426	129	143	134	119
A 90 4	**S3**	**M3S**	195	397.5	1013.5	142	427	1109.5	434	160	155	160	142
A 90 4	**S3**	**M3L**	195	397.5	1045.5	142	434	1136.5	441	160	155	160	142
A 90 4	**S4**	**M4**	258	429	1153.5	193	468	1262.5	486	226	193	217	193

www.reduktor-mex.ru

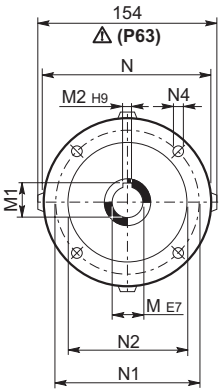

INPUT

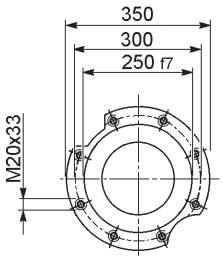

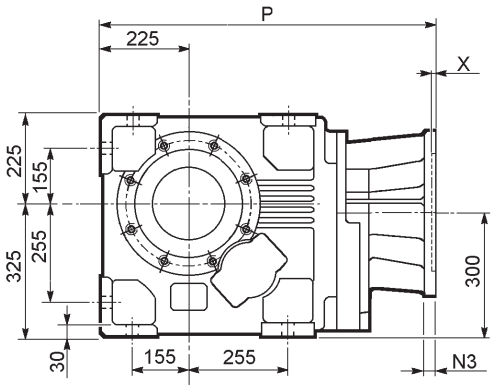

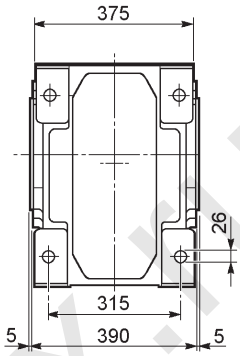

		M	M1	M2	N	N1	N2	N3	N4	X	P	Kg
A 90 3	**P80**	19	21.8	6	200	165	130	—	M10x12	4	723	400
A 90 3	**P90**	24	27.3	8	200	165	130	—	M10x12	4	723	400
A 90 3	**P100**	28	31.3	8	250	215	180	—	M12x16	4.5	733	401
A 90 3	**P112**	28	31.3	8	250	215	180	—	M12x16	4.5	733	401
A 90 3	**P132**	38	41.3	10	300	265	230	16	14	5	769.5	409
A 90 3	**P160**	42	45.3	12	350	300	250	23	18	6	825	428
A 90 3	**P180**	48	51.8	14	350	300	250	23	18	6	825	429
A 90 3	**P200**	55	59.3	16	400	350	300	—	M16x25	7	850	436
A 90 3	**P225**	60	64.4	18	450	400	350	30	18	6	895.5	472
A 90 3	**P250**	65	69.4	18	550	500	450	30	18	6	925.5	475
A 90 4	**P63**	11	12.8	4	140	115	95	—	M8x19	4	786.5	411
A 90 4	**P71**	14	16.3	5	160	130	110	—	M8x16	4.5	786.5	412
A 90 4	**P80**	19	21.8	6	200	165	130	—	M10x12	4	806	413
A 90 4	**P90**	24	27.3	8	200	165	130	—	M10x12	4	806	413
A 90 4	**P100**	28	31.3	8	250	215	180	—	M12x16	4.5	816	415
A 90 4	**P112**	28	31.3	8	250	215	180	—	M12x16	4.5	816	415
A 90 4	**P132**	38	41.3	10	300	265	230	16	14	5	852.5	423
A 90 4	**P160**	42	45.3	12	350	300	250	23	18	5.5	903	434
A 90 4	**P180**	48	51.8	14	350	300	250	23	18	5.5	903	434

A 90...HS

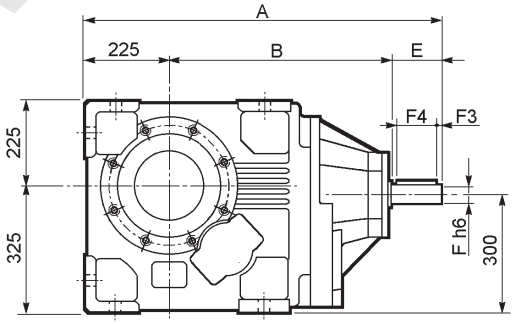

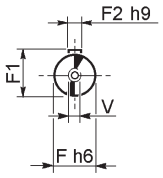

		A	B	E	F	F1	F2	F3	F4	V	Kg
A 90 3	**HS**	1009	644	140	60	64	18	10	120	M16x36	465
A 90 4		875.5	600.5	50	24	27	8	2.5	45	M8x19	415

www.redukt0r-mex.ru

A 90...UR

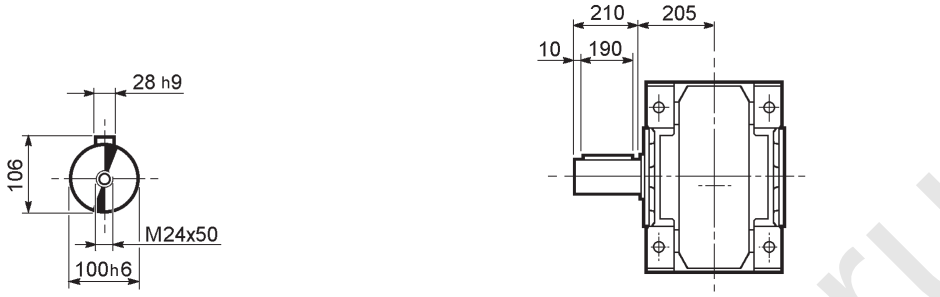

A 90...UD

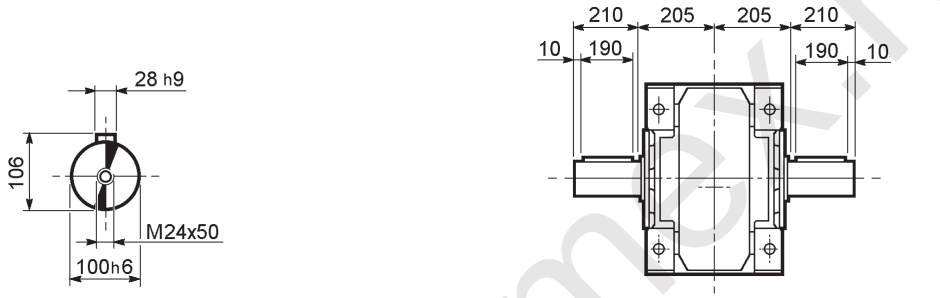

A 90...UH

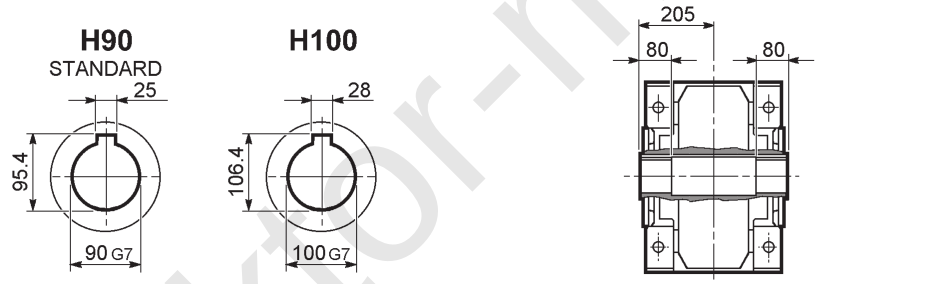

A 90...US

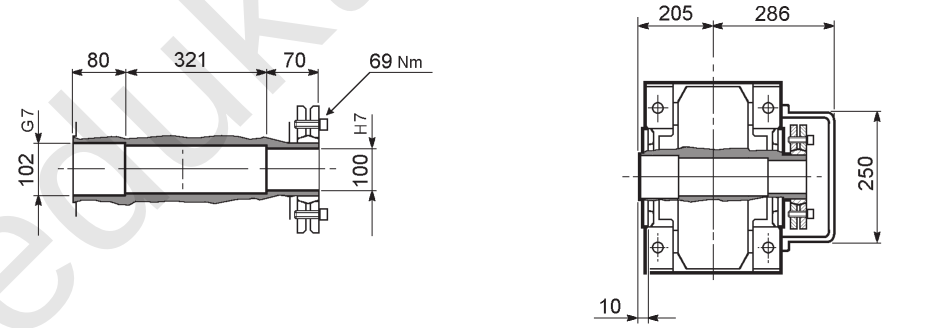

A 90...F...

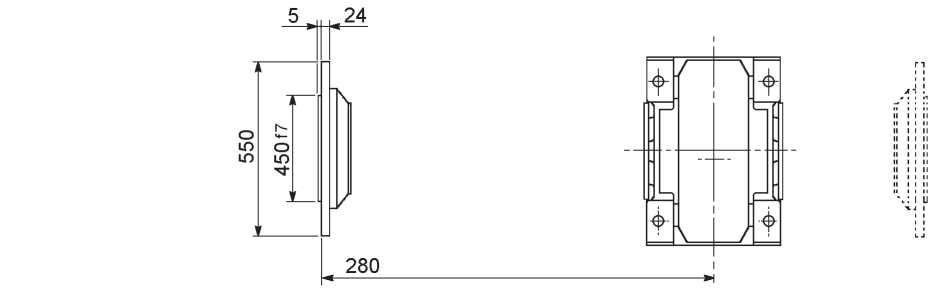

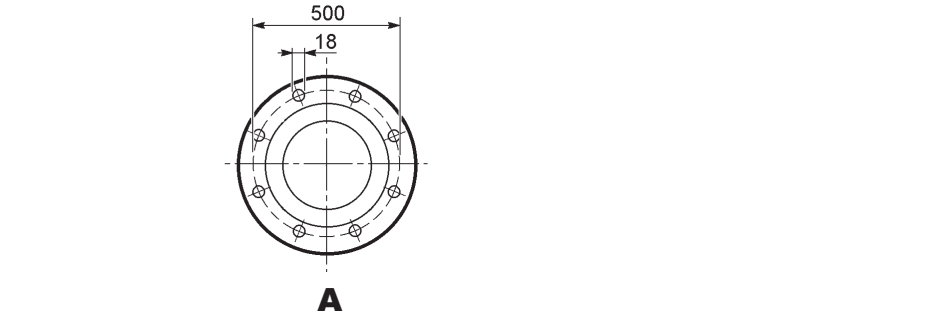

www.reduktor-mex.ru